Discover more ebooks!
Visit our website:
fordshopmanual.com

Buy Now

VISA DISCOVER AMEX PayPal

1969 TRUCK SHOP MANUAL

BRONCO

CLUB WAGON

ECONOLINE

B-SERIES

C-SERIES

F-SERIES

N-SERIES

P-SERIES

T-SERIES

W-SERIES

DEMO

This DEMO contains only a few pages of the entire manual/product.

Not all Bookmarks work on the Demo, but they do on the full version.

Features:
- Searchable text
- Printable pages
- Bookmarked for easy navigation
- High Resolution images
- Zoom to see exact details
- Money back Guarantee
- Transfer to USB flash drive support

Complete 4 Volume Set

VOLUME ONE
VOLUME TWO
VOLUME THREE
VOLUME FOUR

Ford

Ford
OFFICIAL LICENSED PRODUCT
License #2011747

Copyright © 2012, Forel Publishing Company, LLC, Woodbridge, Virginia

All Rights Reserved. No part of this book may be used or reproduced in any manner whatsoever without written permission of Forel Publishing Company, LLC. For information write to Forel Publishing Company, LLC, 3999 Peregrine Ridge Ct., Woodbridge, VA 22192

1969 Ford Truck Shop Manual
EAN: 978-1-60371-077-0
ISBN: 1-60371-077-9

Forel Publishing Company, LLC
3999 Peregrine Ridge Ct.
Woodbridge, VA 22192

This publication contains material that is reproduced and distributed under a license from Ford Motor Company. No further reproduction or distribution of the Ford Motor Company material is allowed without the express written permission of Ford Motor Company.

Note from the Publisher

This product was created from the original Ford Motor Company's publication. Every effort has been made to use the original scanned images, however, due to the condition of the material; some pages have been modified to remove imperfections.

Disclaimer

Although every effort was made to ensure the accuracy of this book, no representations or warranties of any kind are made concerning the accuracy, completeness or suitability of the information, either expressed or implied. As a result, the information contained within this book should be used as general information only. The author and Forel Publishing Company, LLC shall have neither liability nor responsibility to any person or entity with respect to any loss or damage caused, or alleged to be caused, directly or indirectly by the information contained in this book. Further, the publisher and author are not engaged in rendering legal or other professional services. If legal, mechanical, electrical, or other expert assistance is required, the services of a competent professional should be sought.

1969 TRUCK SHOP MANUAL

VOLUME ONE

VEHICLE IDENTIFICATION, BRAKES, SUSPENSION, STEERING WHEELS and TIRES, REAR AXLE, DRIVE SHAFT and CLUTCH, MANAUAL SHIFT TRANSMISSION, AUTOMATIC TRANSMISSION

Ford

BRONCO

CLUB WAGON

ECONOLINE

B-SERIES

C-SERIES

F-SERIES

N-SERIES

P-SERIES

T-SERIES

W-SERIES

1969 TRUCK SHOP MANUAL

VOLUME ONE

VEHICLE IDENTIFICATION, BRAKES, SUSPENSION, STEERING, WHEELS and TIRES, REAR AXLE, DRIVE SHAFT and CLUTCH, MANUAL SHIFT TRANSMISSION, AUTOMATIC TRANSMISSION

Ford SERVICE PUBLICATIONS

FIRST PRINTING—JANUARY, 1969

©1969 FORD MOTOR COMPANY, DEARBORN, MICHIGAN

GROUP INDEX

VEHICLE IDENTIFICATION 1
BRAKES 2
SUSPENSION, STEERING, WHEELS AND TIRES 3
REAR AXLE 4
DRIVE SHAFT AND CLUTCH 5
MANUAL SHIFT TRANSMISSION 6
AUTOMATIC TRANSMISSION 7

VOLUME TWO
ENGINE 8
IGNITION SYSTEM 9
FUEL SYSTEM 10
COOLING SYSTEM 11
EXHAUST SYSTEM 12
STARTING SYSTEM 13

VOLUME THREE
CHARGING SYSTEM 14
LIGHTS, INSTRUMENTS AND CONVENIENCE DEVICES 15
VENTILATING, HEATING AND ACCESSORIES 16
BODY, DOORS AND WINDOWS 17
TRIM AND SEATS 18

VOLUME FOUR
MAINTENANCE 19

SPECIFICATIONS AND SPECIAL SERVICE TOOLS AT END OF EACH GROUP

FOREWORD

The four volumes of this shop manual provide the Service Technician with complete information for the proper servicing of all 1969 Ford Trucks.

The information is grouped according to the type of work being performed, such as frequently performed adjustments and repairs, in-vehicle adjustments major repair etc. Specifications, maintenance information and recommended special tools are included.

The descriptions and specifications in this manual were in effect at the time the manual was approved for printing. Ford Motor Company reserves the right to discontinue models at any time, or change specifications or design, without notice and without incurring obligation.

Ford SERVICE PUBLICATIONS

GENERAL INFORMATION

The Bronco, Econoline and Truck shop manuals have been combined in one Shop Manual divided into four volumes for 1969.

The 1969 Truck Shop Manual has been organized into general Groups as in previous shop manuals. All Groups are listed in the Group index on the first page of each Volume. Groups not contained in a given Volume are listed with a solid gray background.

To locate the beginning page of any particular Group, first select the Volume containing that Group. Bend the manual until the black mark on the first page of the Group can be seen in line with the Group title on the first page of the Volume.

The first page of each Group lists the material contained in the Group under part headings and also lists the beginning page of each Part.

On the beginning page of each Part, there is a Part index which lists in detail all information appearing in the Part, the page where the information is given, and the vehicles to which the information applies.

All pages carry a six-digit number which indicates the Group, Part and Page number.

For Example: Page 03-02-01 indicates
Group 3, Part 2, Page 1

Part Indexes will use only the Part and Page reference numbers.
For Example: Page 03-02-01 will appear in the Part Index as 02-01.

Each Part will start with Page 01.

Ford SERVICE PUBLICATIONS

Vehicle Identification

GROUP 1

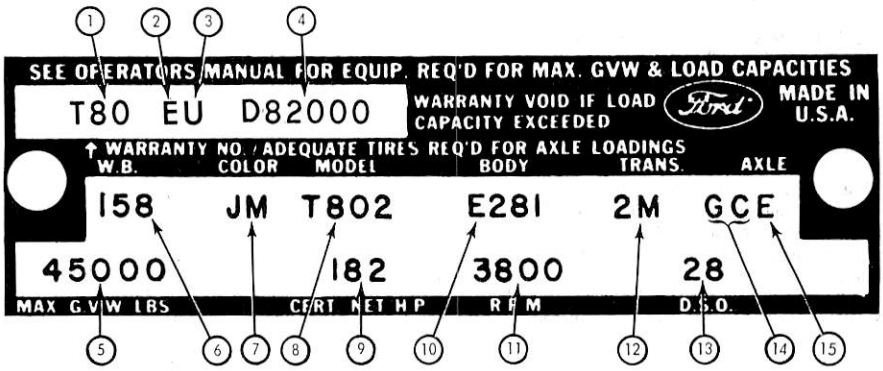

1. TRUCK SERIES CODE
2. ENGINE CODE
3. ASSEMBLY PLANT CODE
4. CONSECUTIVE UNIT NO.
5. RECOMMENDED MAX. GROSS VEHICLE WEIGHT
6. WHEELBASE
7. EXTERIOR PAINT CODES
8. MODEL CODE
9. CERTIFIED NET HORSEPOWER
10. TRIM AND CAB OR BODY TYPE CODE
11. SPECIFIED RPM
12. TRANSMISSION CODES
13. DISTRICT/SPEC. ORDER CODES
14. REAR AXLE CODES
15. FRONT AXLE CODES

W1005-A

FIG. 1 — Typical Truck Rating Plate

RATING PLATE

Figure 1 illustrates a typical truck Rating Plate. On light and medium cowl and windshield vehicles, the Rating Plate is mounted on the right side of the cowl top panel or upper cowl panel under the hood. On Parcel Delivery vehicles, the rating plate is mounted on the right side of the radiator support. On Bronco models, the plate is mounted on the inside panel of the glove compartment door. On all other vehicles, the Rating Plate is mounted on the rear face of the left front door.

VEHICLE WARRANTY NUMBER

The Warranty Number is the first line of numbers and letters appearing on the Rating Plate (Fig. 1). The first letter and two numbers indicate the truck model and series (the letter prefix identifies the type of body or cab and the numbers are the first two numbers of a truck series). The letter following the truck series code designates the engine identification code. The letter following the engine identification code indicates the assembly plant at which the vehicle was built. The remaining numbers indicate the consecutive unit number. The charts that follow list the various vehicle warranty number codes.

VEHICLE DATA

The Vehicle Data appears on the Rating Plate on the two lines following the Warranty Number. The first three digits under W.B. designate the wheelbase in inches. The one or two letters under COLOR identify the exterior paint color (two letters designate a two-tone). The letter and three digits under MODEL designate the truck model within a series. The letter and numerals under BODY designate the interior trim and body type (the letter identifies the interior trim scheme and the numerals identify the body or cab type). The transmission installed in the vehicle is identified under TRANS by either a numeric or alphabetical code (if two symbols appear, the first identifies the auxiliary transmission, if so equipped, and the second symbol identifies the main transmission). A letter and a number or two numbers under AXLE identify the rear axle ratio (when required, a letter is also stamped behind the rear axle code to identify the front axle capacity). The maximum gross vehicle weight in pounds is stamped under MAX. G.V.W. Following MAX. G.V.W., the horsepower rating of the engine with which the vehicle is equipped is stamped under CERT. NET H.P. and the rpm required to develop the given horsepower is stamped under R.P.M. A two-digit number is stamped under D.S.O. to identify the district which ordered the vehicle. If the vehicle is built to special order (Domestic Special Order, Foreign Special Order, Limited Production Option, or other special order), the complete order number will also appear under D.S.O. The charts that follow list the various vehicle data codes.

W.B. (Wheelbase)

The wheelbase in inches is entered in this space.

MAX. G.V.W. Lbs.

The maximum gross vehicle weight in pounds is recorded in this space.

CERT. Net H.P.

The certified net horsepower at specified rpm is marked at this location.

SPECIFIED RPM

The rpm required to develop the certified net horsepower is marked at this location.

D.S.O.

If vehicle is built on a D.S.O., F.S.O., L.P.O. (special orders) the complete order number will be reflected under the DSO space including the District Code Number.

TRUCK SERIES CODE PREFIX@

Prefix	Type
A	Conventional 2 Axle – Diesel
B	School Bus Chassis Cowl 2 Axle – Gas
C	Tilt Cab 2 Axle – Gas
D	Tilt Cab 2 Axle – Diesel
E	Econoline
F	Conventional 2 Axle – Gas
G	Parcel Delivery Chassis 2 Axle – Diesel
H	Tilt Cab 2 Axle – Diesel
J	School Bus Chassis Cowl 2 Axle – Diesel
K	Conventional 2 Axle – Diesel
L	Tilt Cab Tandem Rear Axle – Gas
M	Conventional Tandem Rear Axle – Diesel
N	Conventional 2 Axle – Diesel
P	Parcel Delivery Chassis 2 Axle – Gas
Q	Tilt Cab Tandem – Diesel
R	89" BBC Conventional 2 Axle – Diesel
S	89" BBC Conventional Tandem Rear Axle – Gas
T	Conventional Tandem Rear Axle – Gas
U	Conventional Tandem Rear Axle – Diesel
U14, U15	Bronco
W	89" BBC Conventional Tandem Rear Axle – Diesel
X	Fwd. Axle Tilt Cab Tandem Rear Axle – Diesel
Z	Fwd. Axle Tilt Cab 2 Axle – Diesel

@The last two numbers of the truck series code given in the warranty number (Fig. 1) are the first two numbers of the truck series.

ENGINE CODE

Bronco · Econoline · Club Wagon · Parcel Delivery · School Bus · Light and Medium Trucks

Code	Cylinders	Engine C.I.D.	
A	6	240-1V	Gas
B	6	300-1V L.D.	
B	6	300-1V H.D.	
C	8	330-2V M.D.	
D	8	330-2V H.D.	
E	8	361-2V	
F	6	170-1V	
G	8	302-2V	
H	8	390-2V	
Y	8	360-2V	
1	6	240-1V	Gas-Low Compression
2	6	300-1V H.D.	
3	8	330-2V M.D.	
4	8	330-2V H.D.	
5	8	361-2V	
6	6	170-1V	
7	8	302-2V	
8	8	360-2V	
J	4	242 Dorset	Diesel
U	8	552 CAT. (150)	
V	8	552 CAT. (175)	
W	6	363 Dorset	

HEAVY AND EXTRA HEAVY TRUCK – SERIES 700 Through 1000
N-500 – N-600 and C-550 – C-600

Code	Cylinders	Engine C.I.D.	
A	6	240-1V	Gas
B	6	300-1V	
C	8	330-2V M.D.	
D	8	330-2V H.D.	
E	8	361-2V	
F	8	391-4V	
H	8	401-4V	
K	8	477-4V	
L	8	534-4V	
U	8	330-2V H.D.	Liquid Propane Gas
W	8	361-2V	
9	8	534-4V	

HEAVY AND EXTRA HEAVY TRUCK – SERIES 700 Through 1000
N-500 – N-600 and C-550 – C-600 (Continued)

Code	Cylinders	Engine C.I.D.	
1	6	240-1V	Gas Low Compression
3	8	330-2V M.D.	
4	8	330-2V H.D.	
5	8	361-2V	
A		855 Cummins-NHC-250	Diesel
B		588 Cummins-V6E-195	
C		636 Caterpillar-V8-225 H.P.	
G		785 Cummins-V8-265	
J		855 Cummins-NHC-250	
K		525 Caterpillar 1673-B	
L		525 Caterpillar 1673-B	
M		855 Cummins-NTC-260	
N		855 Cummins-NTC-280	
P		855 Cummins-NTC-300	
Q		855 Cummins-NTC-320	
R		855 Cummins-NTC-335	
S		426 Detroit 6-71N	
T		568 Detroit 8V-71N	
U		522 Caterpillar V8-150 H.P.	
V		522 Caterpillar V8-175 H.P.	
W		363 Dorset	
X		464 Cummins-CF-160	
Y		464 Cummins-C-180	
Z		464 Cummins-C-160	
1		855 Cummins-NH-230	
2		426 Detroit 6-71N	
3		638 Caterpillar 1674	
4		573 Caterpillar-V8-200 H.P.	
5		855 Cummins-NHCT-270	
6		568 Detroit 8V-71N	
7		568 Detroit 8V-71NE	
8		318 Detroit 6V-53N	
9		426 Detroit 6-71NE	

ASSEMBLY PLANT CODES

Code Letter	Assembly Plant	Code Letter	Assembly Plant
C	Ontario	N	Norfolk
D	Dallas	P	Twin Cities
E	Mawah	R	San Jose
H	Lorain	S	(Pilot Plant) Allen Park
K	Kansas City	U	Louisville
L	Michigan Truck		

CONSECUTIVE UNIT NO. ALL SERIES EXCEPT ECONOLINE

The uniform sequential serial and numbering system for the 1969 model truck program is as follows:

1968 (calendar year)	
Aug.—1969 Model	D82,000 Thru D95,999
Sept.	D96,000 Thru E09,999
Oct.	E10,000 Thru E23,999
Nov.	E24,000 Thru E37,999
Dec.	E38,000 Thru E51,999
1969 (calendar year)	
Jan.	E52,000 Thru E65,999
Feb.	E66,000 Thru E79,999
Mar.	E80,000 Thru E93,999
Apr.	E94,000 Thru F07,999
May	F08,000 Thru F21,999
June	F22,000 Thru F35,999
July	F36,000 Thru F49,999
Aug.	F50,000 Thru F63,999

ECONOLINE

1968 Calendar Year—(Merchandised as 1969 model)

January	C70,000 Thru C83,999
February	C84,000 Thru C97,999
March	C98,000 Thru D11,999
April	D12,000 Thru D25,999
May	D26,000 Thru D39,999
June	D40,000 Thru D53,999
July	D54,000 Thru D67,999
August	D68,000 Thru D81,999
September	D96,000 Thru E09,999
October	E10,000 Thru E23,999
November	E24,000 Thru E37,999
December	E38,000 Thru E51,999
1969 Calendar Year	
January	E52,000 Thru E65,999
February	E66,000 Thru E79,999
March	E80,000 Thru E93,999
April	E94,000 Thru F07,999
May	F08,000 Thru F21,999

TRUCK SERIES CODE

RECOMMENDED MAX. GROSS VEHICLE WEIGHT

MODEL CODE

ECONOLINE

Series	Model Code	Rating G V W (lbs.)
E-100	E-140	4,000
	E-141	4,200
	E-142	5,400
	E-150	4,000
	E-151	4,200
	E-152	4,500
	E-160	4,000
	E-161	4,200
	E-162	4,500
E-200	E-240	5,100
	E-241	4,950
	E-242	5,400
	E-243	5,100
	E-244	5,400
	E-250	5,100
	E-251	4,950
	E-252	5,400
	E-253	5,100
	E-254	5,400
	E-260	5,100
	E-261	4,950
	E-262	5,400
	E-263	5,100
	E-264	5,400
E-300	E-340	6,050
	E-341	6,800
	E-342	7,400
	E-343	7,400
	E-344	7,600
	E-345	7,600
	E-350	6,050
	E-351	6,800
	E-352	7,400
	E-353	7,400
	E-354	7,600
	E-355	7,600
	E-360	6,050
	E-361	6,800
	E-362	7,400
	E-363	7,400
	E-364	7,600
	E-365	7,600

BRONCO, ECONOLINE CLUB AND CHATEAU WAGON

Series	Model Code	Type
Bronco		
U-100	U-140	Sports Utility
	U-142	(Heavy Duty)
	U-150	Wagon
	U-152	(Heavy Duty)
Econoline Club and Chateau Wagon		
E-100	E-110	Club Wagon
	E-120	Custom Club Wagon
	E-130	Chateau Wagon
E-200	E-210	Club Wagon
	E-220	Custom Club Wagon
	E-230	Chateau Wagon
E-300	E-310	Club Wagon
	E-320	Custom Club Wagon
	E-330	Chateau Wagon
E-300 HD	E-311	Club Wagon
	E-321	Custom Club Wagon
	E-331	Chateau Wagon

F-100, F-350 AND P SERIES

Series	Model Code	Rating G V W (lbs)
F-100	F-100	5,000
	F-101	4,200
	F-102	5,000
	F-103	4,500
	F-104	4,800
F-100 (4x4)	F-110	5,600
	F-111	5,000
	F-112	5,600
	F-113	4,600
F-250	F-250	7,500
	F-252	7,500
	F-253	6,100
	F-254	6,900
	F-255	6,100
	F-256	6,900
F-250 (4x4)	F-260	6,800
	F-262	7,700
	F-263	6,300
	F-264	7,700
F-350	F-350	8,000
	F-351	10,000
	F-352	8,000
	F-353	6,600
	F-354	8,300
	F-355	9,000
P-350	P-350	8,000
	P-351	6,100
	P-352	6,500
	P-353	8,000
P-400	P-400	10,000
	P-401	7,700
	P-402	8,000
	P-403	7,000
P-500	P-500	15,000
	P-501	10,100
	P-502	8,000
P-600	P-600 (DSO)	17,000
	P-601 (DSO)	15,000
P-3500 (Diesel)	G-350	8,000
	G-351	6,100
	G-352	6,500
	G-353	8,000
P-4000 (Diesel)	G-400	10,000
	G-401	7,700
	G-402	8,000
	G-403	7,000
P-5000 (Diesel)	G-500	15,000
	G-501	10,100
	G-502	8,000
	G-503	12,000
P-6000 (Diesel)	G-600 (DSO)	17,000
	G-601 (DSO)	15,000

500 – 800 SERIES

Series	Model Code	Rating G V W (lbs.)
B-500	B-500	15,000
	B-501	10,000
	B-502	16,000
	B-503	17,000
	B-504	18,000
	B-505	20,000
B-600	B-600	19,500
	B-601	15,000
	B-602	20,000
	B-603	17,000
	B-610	21,000
	B-611	22,000
	B-612	23,000
	B-613	24,000
	B-614	19,700
	J-610	21,000
	J-611	22,000
	J-612	23,000
	J-613	24,000
	J-614	19,700
B-6000 (Diesel)	J-600	20,000
	J-601	15,000
	J-602	19,500
	J-603	17,000
B-700	B-700	20,500
	B-701	17,000
	B-702	21,000
	B-703	22,500
	B-704	23,000
	B-705	24,000
	B-706	25,500
	B-707	23,000
	B-708	23,000
	B-709	21,000
B-7000	J-700	20,500
	J-701	17,000
	J-702	21,000
	J-703	22,500
	J-704	23,000
	J-705	24,000
	J-706	25,500
	J-707	23,000
	J-708	23,000
	J-709	22,000
B-750	B-750	22,500
	B-751	17,000
	B-752	23,000
	B-753	24,000
	B-754	25,500
	B-755	23,000
	B-756	23,000
C-550	C-550	15,000
	C-551	10,000
	C-552	17,000
	C-553	19,000
	C-554	20,000
C-600	C-600	20,000
	C-601	15,000
	C-610	21,000
	C-611	22,000
	C-612	23,000
	C-613	23,000
	C-614	23,000
C-6000	D-600	20,000
	D-601	15,000
	D-610	21,000
	D-611	22,000
	D-612	23,000
	D-613	23,000
	D-614	23,000

500 – 800 SERIES (Continued)

Series	Model Code	Rating G V W (lbs)
C-700	C-700	24,000
	C-701	17,000
	C-702	25,500
	C-703	25,500
	C-704	25,500
	C-705	27,500
C-7000	D-700	24,000
	D-701	17,000
	D-702	25,500
	D-703	25,500
	D-704	25,500
C-750	C-750	24,000
	C-751	17,000
	C-752	25,500
	C-753	25,500
	C-754	25,500
	C-755	27,500
	C-756	27,500
	C-760	27,500
C-800	C-800	27,000
	C-801	20,000
	C-802	27,500
	C-803	27,500
	C-804	27,500
	C-805	27,500
	C-806	27,500
C-8000 6-Cyl. Diesel	D-800	27,000
	D-801	20,000
	D-802	27,500
	D-803	27,500
	D-804	26,000
	D-805	24,000
C-8000 V-8 Diesel	H-800	27,000
	H-801	20,000
	H-802	27,500
	H-803	27,500
	H-804	26,000
	H-805	24,000
CT-800	L-800	43,000
	L-801	27,000
	L-802	39,000
	L-803	45,000
	L-804	49,000
	L-805	41,000
CT-8000	Q-800	43,000
	Q-801	27,000
	Q-802	39,000
	Q-803	45,000
	Q-804	49,000
	Q-805	51,000
F-500	F-500	15,000
	F-501	10,000
	F-502	16,000
	F-503	17,000
	F-504	18,000
	F-505	20,000
F-600	F-600	19,500
	F-601	15,000
	F-602	20,000
	F-603	17,000
	F-610	21,000
	F-611	22,000
	F-612	23,000
	F-613	23,000
	F-614	23,000
	F-615	24,000
	F-616	19,700
	F-617	20,000

500 – 800 SERIES (Continued)

Series	Model Code	Rating G V W (lbs)
F-6000 (Diesel)	K-600	20,000
	K-601	15,000
	K-602	19,500
	K-603	17,000
	K-610	21,000
	K-611	22,000
	K-612	23,000
	K-613	23,000
	K-614	23,000
	K-615	24,000
	K-616	19,700
F-700	F-700	22,000
	F-701	17,000
	F-702	23,000
	F-703	24,000
	F-704	25,500
	F-705	23,000
	F-706	23,000
	F-707	25,500
F-7000	K-700	22,000
	K-701	17,000
	K-702	23,000
	K-703	24,000
	K-704	25,500
	K-705	23,000
	K-706	23,000
	K-707	25,500
F-750	F-750	22,500
	F-751	17,000
	F-752	23,000
	F-753	24,000
	F-754	25,500
	F-755	23,000
	F-756	25,500
	F-757	23,000
	F-758	27,500
	F-759	28,000
F-800	F-800	23,000
	F-801	17,000
	F-802	24,000
	F-803	25,500
	F-805	23,000
	F-806	25,500
	F-807	27,500
	F-808	27,500
	F-809	25,500
	F-810	30,000
	F-811	27,500
F-8000 6-Cyl. Diesel	K-800	24,000
	K-801	20,000
	K-802	25,500
	K-804	27,500
	K-805	27,500
	K-806	24,000
	K-807	24,500
	K-810	27,500
F-8000 V-8 Diesel	A-800	24,000
	A-801	20,000
	A-802	25,500
	A-804	27,500
	A-805	27,500
	A-806	24,000
	A-807	24,500
	A-810	27,500
	A-811	30,000
	A-812	30,000

500 – 800 SERIES (Continued)

Series	Model Code	Rating G V W (lbs)
N-500	N-500	15,000
	N-501	10,000
	N-502	16,000
	N-503	17,000
	N-504	18,000
	N-505	20,000
N-600	N-600	19,500
	N-601	15,000
	N-602	20,000
	N-603	17,000
	N-610	21,000
	N-611	22,000
	N-612	23,000
	N-613	23,000
	N-614	23,000
	N-615	24,000
	N-616	19,700
	N-617	20,000
N-6000	R-600	20,000
	R-601	15,000
	R-610	21,000
	R-611	22,000
	R-612	23,000
	R-613	23,000
	R-614	23,000
	R-615	24,000
N-700	N-700	22,000
	N-701	17,000
	N-702	23,000
	N-703	24,000
	N-704	25,500
	N-705	23,000
	N-706	23,000
	N-707	25,500
	N-708	25,500
N-7000	R-700	22,000
	R-701	17,000
	R-702	23,000
	R-703	24,000
	R-704	25,500
	R-705	23,000
	R-706	23,000
N-750	N-750	22,500
	N-751	17,000
	N-752	23,000
	N-753	24,000
	N-754	25,500
	N-755	23,000
	N-756	25,500
	N-757	23,000
	N-758	25,500
	N-759	25,500
N-8000	R-800	25,000
	R-801	20,000
	R-802	25,000
	R-804	27,000
	R-805	27,000
	R-806	25,500
	R-807	27,500
	R-808	25,500
	R-809	34,000
	R-810	28,000
	R-811	29,000
	R-812	30,000
	R-813	31,000
	R-814	32,000
	R-815	32,000
	R-816	33,000

500 – 800 SERIES (Continued)

Series	Model Code	Rating G V W (lbs)
NT-8000 (DSO)	W-800	39,000
	W-801	27,000
	W-802	41,000
	W-803	43,000
	W-804	43,000
	W-805	45,000
	W-806	49,000
	W-807	43,000
	W-808	45,000
	W-809	51,000
T-800	T-800	43,000
	T-801	27,000
	T-802	45,000
	T-803	49,000
	T-804	43,000
	T-805	36,000
	T-806	37,000
	T-807	39,000
	T-808	41,000
	T-809	29,000
T-8000 6 Cyl. Diesel	U-800	39,000
	U-801	27,000
	U-802	41,000
	U-803	43,000
	U-804	45,000
	U-805	49,000
	U-806 (DSO)	56,000
	U-807 (DSO)	62,000
	U-808	53,000
	U-809	59,000
	U-810	53,000
T-8000 V-8 Diesel	M-800	39,000
	M-801	27,000
	M-802	41,000
	M-803	43,000
	M-804	45,000
	M-805	49,000
	M-806	56,000
	M-807	62,000
	M-808	53,000
	M-809	59,000
	M-810	53,000

850 – 1000 SERIES

Series	Model Code	Rating G V W (lbs)
C-850	C-850	27,000
	C-851	20,000
	C-852	27,000
	C-853	27,000
	C-854	27,000
	C-855	27,500
	C-856	27,500
CT-850	L-850	39,000
	L-851	27,000
	L-852	41,000
	L-853	43,000
	L-854	45,000
	L-855	49,000

850 – 1000 SERIES (Continued)

Series	Model Code	Rating G V W (lbs)
C-950	C-950	30,000
	C-951	24,000
	C-952	30,000
	C-953	32,000
	C-954	32,000
	C-955	34,000
	C-956	34,000
	C-957	31,000
	C-958	33,000
CT-950	L-950	47,000
	L-951	30,000
	L-952	49,000
	L-953	51,000
C-1000	C-000	32,000
	C-001	26,000
	C-002	34,000
	C-003	36,000
F-850	F-850	25,000
	F-851	20,000
	F-852	25,000
	F-854	27,000
	F-855	27,000
	F-856	25,500
	F-858	25,500
	F-860	27,000
	F-861	27,500
	F-862	32,000
F-950	F-950	28,000
	F-951	24,000
	F-952	30,000
	F-953	30,000
	F-954	32,000
	F-955	32,000
	F-956	34,000
	F-957	29,000
	F-958	31,000
	F-959	33,000
F-950-D	K-950	28,000
	K-951	24,000
	K-952	30,000
	K-953	30,000
	K-954	32,000
	K-955	32,000
	K-956	34,000
	K-957	29,000
	K-958	31,000
	K-959	33,000
	K-960	25,500
	K-961	27,500
F-1000	F-000	32,000
	F-001	26,000
	F-002	34,000
	F-003	36,000
F-1000-D	K-000	32,000
	K-001	26,000
	K-002	34,000
	K-003	36,000

850 – 1000 SERIES (Continued)

Series	Model Code	Rating G V W (lbs)
N-850	N-850	25,000
	N-851	20,000
	N-852	25,000
	N-854	27,000
	N-855	27,000
	N-856	25,500
	N-858	25,500
	N-860	27,000
	N-861	27,500
NT-850	S-850	39,000
	S-851	27,000
	S-852	41,000
	S-853	43,000
	S-854	43,000
	S-855	45,000
	S-856	49,000
	S-857	43,000
	S-858	45,000
NT-850-D	W-850	43,000
	W-851	27,000
	W-852	39,000
	W-853	41,000
	W-854	45,000
	W-855	49,000
N-950	N-950	28,000
	N-951	24,000
	N-952	30,000
	N-953	30,000
	N-954	32,000
	N-955	32,000
	N-956	34,000
	N-957	29,000
	N-958	31,000
	N-959	33,000
NT-950	S-950	47,000
	S-951	30,000
	S-952	49,000
	S-953	53,000
NT-950-D	W-950	47,000
	W-951	30,000
	W-952	49,000
	W-954	51,000
N-1000	N-000	32,000
	N-001	26,000
	N-002	34,000
	N-003	36,000
N-1000-D	R-000	32,000
	R-001	26,000
	R-002	34,000
	R-003	36,000
	R-004	27,500
T-850	T-850	39,000
	T-851	27,000
	T-852	41,000
	T-853	43,000
	T-854	43,000
	T-855	45,000
	T-856	49,000
	T-857	43,000
	T-858	45,000
	T-859	51,000
T-850-D	U-850	39,000
	U-851	27,000
	U-852	41,000
	U-853	43,000
	U-854	45,000
	U-855	49,000
	U-856	51,000

850-1000 SERIES (Continued)

Series	Model Code	Rating G V W (lbs)
T-950	T-950	47,000
	T-951	30,000
	T-952	49,000
	T-953	53,000
	T-954	55,000
	T-955	59,000
	T-956 (DSO)	65,000
	T-957 (DSO)	75,000
	T-958 (DSO)	78,000
	T-959	62,000
T-950-D	U-950	47,000
	U-951	30,000
	U-952	49,000
	U-953	53,000
	U-954	56,000
W-1000	Z-000	32,000
	Z-001	26,000
	Z-002	34,000
	Z-003	36,000
WT-1000	X-000	41,000
	X-001	32,000
	X-002	45,000
	X-003	49,000

EXTERIOR PAINT COLOR CODES

Code	M-30J/M-32J Spec. Number ①	Color
A	1724-A	Black
B	3059-A	Royal Maroon
B (Econoline only)	556-A	Turquoise
C	1525-A	White
E	1906-A	Lt. Blue
F	1226-A	Lt. Blue
G	1526-A	Chrome Yellow
J	1515-A	Red
L	1237-A	Dark Green
M	1619-A	White
N	3282-A	Dk. Green
N (Econoline only)	1911-A	Med. Beige Metallic
P	3150-A	Med. Ivy Green Metallic
Q	1624-A	Med. Blue Metallic
R	3125-A	Lt. Ivy Green
T	2008-A	Red
U	2097-A	Med. Green
W	3120-A	Yellow
X	1742-A	Med. Blue
Y	3216-A	Med. Aqua
2	3071-A	Lt. Ivy Yellow
2 (Econoline only)	1878-A	Med. Beige
3	1635-A	Gold
4	3069-A	Lt. Ivy Green Metallic
6	1631-A	Lt. Beige
7	2098-A	Med. Blue

① M-32J Acrylic Enamel Alternate with M-30J Alkyd.

INTERIOR TRIM CODES

BRONCO

Code	Color	Trim
3	Light and Pastel Parchment	Matchstick and Corinthian Vinyl
9, 94, 9U	Pastel Parchment	Rosette and Corinthian Vinyl

CLUB WAGON

Code	Color	Trim
23, 24, 25	Medium & Light Blue (Std)	Kenton & Corinthian Vinyl
23, 24, 25	Light Blue (Custom)	Kenton & Corinthian Vinyl
33, 34, 35	Light Nugget Gold	Kenton & Corinthian Vinyl
43, 44, 45	Light Ivy Gold	Kenton & Corinthian Vinyl
53, 54, 55	Red	Kenton & Corinthian Vinyl
J3, J4, J5	White	Corinthian Vinyl
K3, K4, K5	Light Blue	Corinthian Vinyl
L3, L4, L5	Light Nugget Gold (with white seat)	Corinthian Vinyl
M3, M4, M5	Light Ivy Gold	Corinthian Vinyl

ECONOLINE

Code	Color	Trim
2, 21, 22	Light Blue	Kenton & Corinthian Vinyl
3, 31, 32	Light Nugget Gold	Kenton & Corinthian Vinyl
4, 41, 42	Light Ivy Gold	Kenton & Corinthian Vinyl
5, 51, 52	Red	Kenton & Corinthian Vinyl
A	White	Corinthian Vinyl
B	Light Blue	Corinthian Vinyl
D	Light Ivy Gold	Corinthian Vinyl
K6, K7, K8	Light Blue	Corinthian Vinyl
L6, L7, L8	Light Nugget Gold (with white seat)	Corinthian Vinyl
M6, M7, M8	Light Ivy Gold	Corinthian Vinyl

LIGHT AND MEDIUM TRUCKS (F- B- P-100 THROUGH 600)

Code	Color	Trim
2	Light Blue	Woven Thong/Corinthian Vinyl
3	Pastel Parchment W/Black	Woven Thong/Corinthian Vinyl
4	Black	Woven Thong/Corinthian Vinyl
5	Red	Woven Thong/Corinthian Vinyl
23, B	Light Blue	Woven Plastic/Corin Rib/ Corin Vinyl
33, C	Light & Pastel Parchment	Woven Plastic/Corin Rib/ Corin Vinyl
43, D	Black	Woven Plastic/Corin Rib/ Corin Vinyl
53, E	Red	Woven Plastic/Corin Rib/ Corin Vinyl
2B, 2C, BB	Black W/Blue	Leather Grain H.D. Vinyl
3B, 3C, CB	Black W/Parchment	Leather Grain H.D. Vinyl
4B, 4C, DB	Black	Leather Grain H.D. Vinyl
5B, 5C, EB	Black W/Red	Leather Grain H.D. Vinyl
B4	Light Blue	Kiwi/Corinthian Vinyl
C4	Parchment	Kiwi/Corinthian Vinyl
D4, M4	Black	Kiwi/Corinthian Vinyl
E4, N4	Red	Kiwi/Corinthian Vinyl
K4	Dark Blue	Kiwi/Corinthian Vinyl
L4	Pastel Parchment	Kiwi/Corinthian Vinyl
K	Dark Blue	Granda & Corinthian Vinyl
L	Light & Pastel Parchment	Granda & Corinthian Vinyl
M	Black	Granda & Corinthian Vinyl
N	Dark Red	Granda & Corinthian Vinyl

HEAVY AND EXTRA HEAVY TRUCKS (N-500-600, C550-600, and 700 through 1000)

Code	Color	Trim
42	Black	Woven Thong/Corinthian Vinyl
43	Black	Woven Plastic/Corin Rib/ Corinthian Vinyl
13, A2	Grey	Twill Stripe Vinyl and Woven Plastic
B2	Light Blue	Woven Plastic/Corin Rib/ Corinthian Vinyl
C2	Light & Pastel Parchment	Woven Plastic/Corin Rib/ Corinthian Vinyl
D2	Black	Woven Plastic/Corin Rib/ Corinthian Vinyl
E2	Red	Woven Plastic/Corin Rib/ Corinthian Vinyl
4B, 4C, 4E, 4F 4N, 4P, 4V, 4W, DB, DE, DF, DN, DP, DV, DW, DO	Black	Leather Grain Vinyl
BB, BE, BF, BV, BW, BO	Black W/Blue	Leather Grain Vinyl
CB, CE, CF, CN, CP, CV, CW, CO	Black W/Parchment	Leather Grain Vinyl
EB, EE, EF, EN, EP, EV, EW, EO	Black W/Red	Leather Grain Vinyl

TRANSMISSION CODES

BRONCO, ECONOLINE, CLUB WAGON, PARCEL, SCHOOL BUS, AND F-B-P-100-600 SERIES

Code	Description
A	4-Speed New Process 435
B	3-Speed O/Drive T-85
C	3-Speed Ford L. D.
D	3-Speed Warner M. D. T89F
E	3-Speed Warner H. D. T87G
F	4-Speed Syn. Warner T18
G	Automatic
M	5-Speed Clark 285-V Direct
O	5-Speed New Process 541-FL Direct
P	4-Speed Warner T19
T	5-Speed New Process 541-FO O/Dr.
2	5-Speed Clark 282-V Direct
4	5-Speed Clark 280-VO O/Dr.
9	5-Speed New Process 541-FD Direct

700-1000-N500 N600-C550-C600 SERIES

Code	Description
A	4-Speed New Process 435 ③
B	10-Speed Fuller R-96 Direct (Steel) ①
C	10-Speed Fuller RT 510 Direct ①
D	5-Speed Clark 387V Direct ①
E	5-Speed Fuller 5H74 Direct ①
F	Fuller 5HA74 (Aluminum) ②
G	5-Speed Clark 380VO O/Drive ①
H	5-Speed Clark 305V Direct ①
I	5-Speed Clark 307V Direct ①
K	5-Speed Spicer 6453A Direct ①

700-1000-N500
N600-C550-C600 SERIES (Continued)

Code	Description
M	5-Speed Clark 285V Direct ①
N	5-Speed Spicer 6352 Direct ①
O	5-Speed Fuller T905B Direct ③
O	5-Speed New Process 541FL Direct ③
P	4-Speed Warner T-19 ①
Q	5-Speed Spicer 5652 Direct ①
S	5-Speed Spicer 5756B Direct ①
T	5-Speed New Process 541FO O/Drive ③
U	5-Speed Spicer 6852G Direct ①
V	10-Speed Fuller RT 910 Direct ②
W	5-Speed Spicer 6352B Direct ①
X	6-Speed Transmatic MT30 ③
X	5-Speed Fuller T905A Direct ②
Y	6-Speed Transmatic MT40 ③
Y	6-Speed Transmatic MT41 ③
1	5-Speed Spicer 8552A Direct ②
1	6-Speed Transmatic MT42 ③
2	5-Speed Clark 282V Direct ①
3	5-Speed Spicer 5852 Direct ②
4	5-Speed Clark 280VO O/Drive ①
5	10-Speed Fuller RTO 910 O/Drive ②
6	15-Speed Fuller RTO 915 O/Drive ②
7	5-Speed Clark 385V Direct ①
8	12-Speed Spicer 8312 O/Drive (Aluminum) ②
9	15-Speed Fuller RT915 Direct ②
9	5-Speed New Process 541FD Direct ③

① Gasoline or Diesel engines ② Diesel only ③ Gasoline only

AUXILIARY TRANSMISSION CODES

Code ①	Type		Ratio
1	3-Speed Spicer	5831-C	1.27 / .85
2	3-Speed Spicer	5831-D	2.0 / .85
3	3-Speed H. D. Spicer	7231-B	1.24 / .86
4	3-Speed H. D. Spicer	7231-D	2.14 / .86
5	4-Speed Spicer	8341-C	2.40 /1.29 /.84
6	3-Speed Spicer	8031-C	2.59 / .79
8	4-Speed Spicer	7041	2.31 /1.21 /.83
9	3-Speed Fuller	3D65	2.221/ .804
A	3-Speed Fuller	3J65	1.17 / .86
B	3-Speed Fuller	4C75	2.22 /1.18 /.85

NOTE: When required, the auxiliary transmission code will be stamped directly in front of the transmission code.

① If the "New Process" transmission is installed, the auxiliary transmission code will bear the suffix "N".

DISTRICT CODES

Code	District	Code	District
11	Boston	51	Denver
13	New York	53	Kansas City
15	Newark	54	Omaha
16	Philadelphia	55	St. Louis
17	Washington	61	Dallas
21	Altanta	62	Houston
22	Charlotte	63	Memphis
24	Jacksonville	64	New Orleans
25	Richmond	65	Oklahoma City
27	Cincinnati	71	Los Angeles
28	Louisville	72	San Jose
32	Cleveland	73	Salt Lake City
33	Detroit	74	Seattle
34	Indianapolis	75	Phoenix
35	Lansing	83	Government
37	Buffalo	84	Home Office Reserve
38	Pittsburgh	85	American Red Cross
41	Chicago	89	Transporation
43	Milwaukee	90's	Export
44	Twin Cities		
45	Davenport		
Ford of Canada			
B1	Central	B4	Midwestern
B2	Eastern	B6	Western
B3	Atlantic	B7	Pacific
I1 thru I7			Export

REAR AXLE CODES

BRONCO, ECONOLINE, CLUB WAGON, PARCEL, SCHOOL BUS AND F-B-P-100 THRU 600 SERIES

Code	Identification	Ratio and Capacity (Pounds)
03	Ford	4.11—2780
04	Ford	4.57—2780
05	Ford	4.11—3300
06	Ford	4.57—3300
07	Ford	3.00—3050
08	Ford	3.50—3300
09	Ford	3.70—3300
10	Ford	3.25—3050
11	Ford	3.50—3050
12	Ford	4.11—3050
13	Ford	4.57—3050
17	Ford	3.25—3300
18	Ford	3.50—2780
22	Dana #70	4.88—7400
23	Dana #70	5.13—7400
24	Dana #60	4.10—5200
25	Dana #60	4.56—5200
27	Dana #70	4.10—7400
28	Dana #70	4.56—7400
30	Rockwell C-100	5.29—11,000
31	Dana	3.54—4800
32	Rockwell C-100	6.20—11,000
33	Dana	3.73—4800
34	Rockwell C-100	6.80—11,000
35	Dana	4.10—4800
36	Dana	4.56—4800

BRONCO, ECONOLINE, CLUB WAGON, PARCEL, SCHOOL BUS AND F-B-P-100 THRU 600 SERIES (Continued)

Code	Identification	Ratio and Capacity (Pounds)
36	Dana #70	3.73—7400
37	Dana #60	3.54—5200
38	Dana #60	3.73—5200
41	Rockwell D-100	5.83—13,000
42	Rockwell D-100	6.20—13,000
44	Rockwell D-100	6.80—13,000
52	Rockwell H-170	5.86—17,500
53	Rockwell H-170	6.14—17,500
54	Rockwell H-170	6.83—17,500
55	Rockwell H-170	7.17—17,500
62	Rockwell F-106	6.20—15,000
64	Rockwell F-106	6.80—15,000
66	Rockwell F-106	7.20—15,000
A1	Ford	3.25—3300 ①
A2	Ford	3.70—3300 ①
A3	Ford	4.11—2780 ①
A5	Ford	4.11—3300 ①
B4	Dana #60	4.10—5200 ①
B5	Dana #60	4.56—5200 ①
B8	Ford	3.50—2780 ①
B9	Ford	3.50—3300 ①
C1	Dana	3.54—4800 ①
C3	Dana	3.73—4800 ①
C5	Dana	4.10—4800 ①
C6	Dana	4.56—4800 ①
C7	Dana #60	3.54—5200 ①
C8	Dana #60	3.73—5200 ①
D2	Dana #70	4.88—7400 ①
D6	Dana #70	3.73—7400 ①
D7	Dana #70	4.10—7400 ①
D8	Dana #70	4.56—7400 ①
E1	Eaton 16244	5.57/7.75—17,500 ②
E2	Eaton 16244	6.17/8.58—17,500 ②
E3	Eaton 16244	6.50/9.04—17,500 ②
E5	Dana #60-3	4.10—3600 ①
E9	Dana #60-3	3.54—3600 ①
F1	Eaton 15201	5.14/7.17—15,000 ②
F2	Eaton 15201	5.83/8.12—15,000 ②
F3	Eaton 15201	6.33/8.81—15,000 ②

① Locking
② 2-Speed

700-1000 SERIES, N500-600 AND C550-600

Code	Identification	Ratio and Capacity (Pounds)
30	Rockwell C-100	5.29–11,000
32	Rockwell C-100	6.20–11,000
34	Rockwell C-100	6.80–11,000
41	Rockwell D-100	5.83–13,000
42	Rockwell D-100	6.20–13,000
44	Rockwell D-100	6.80–13,000
52	Rockwell H-170	5.86–17,500
53	Rockwell H-170	6.14–17,500
54	Rockwell H-170	6.83–17,500
55	Rockwell H-170	7.17–17,500

700-1000 SERIES, N500-600 AND C550-600 (Continued)

Code	Identification	Ratio and Capacity (Pounds)
62	Rockwell F-106	6.20–15,000
64	Rockwell F-106	6.80–15,000
66	Rockwell F-106	7.20–15,000
1E	Eaton 34 M	4.56–34,000
2E	Eaton 34 M	5.85–34,000
3E	Eaton 34 M	6.69–34,000
4E	Eaton 34 M	7.80–34,000
5E	Eaton 34 M	8.60–34,000
B1	Rockwell SLHD Hendrickson	4.11–34,000
B2	Rockwell SLHD Hendrickson	4.44–34,000
B3	Rockwell SLHD Hendrickson	4.63–34,000
B4	Rockwell SLHD Hendrickson	4.88–34,000
B5	Rockwell SLHD Hendrickson	5.29–34,000
B6	Rockwell SLHD Hendrickson	5.83–34,000
B7	Rockwell SLHD Hendrickson	6.17–34,000
B8	Rockwell SLHD Hendrickson	6.83–34,000
B9	Rockwell SLHD Hendrickson	7.80–34,000
B0	Rockwell SLHD Hendrickson	8.60–34,000
D1	Rockwell SQHD Hendrickson	4.11–38,000
D2	Rockwell SQHD Hendrickson	4.44–38,000
D3	Rockwell SQHD Hendrickson	4.63–38,000
D4	Rockwell SQHD Hendrickson	5.29–38,000
D5	Rockwell SQHD Hendrickson	5.83–38,000
D6	Rockwell SQHD Hendrickson	6.83–38,000
D7	Rockwell SQHD Hendrickson	7.80–38,000
D8	Rockwell SQHD Hendrickson	8.60–38,000
D0	Rockwell SQHD Hendrickson	4.88–38,000
E1	Eaton 16244	5.57/7.75–17,500 ①
E2	Eaton 16244	6.17/8.58–17,500 ①
E3	Eaton 16244	6.50/9.04–17,500 ①
F1	Eaton 15201	5.14/7.17–15.000 ①
F2	Eaton 15201	5.83/8.12–15,000 ①
F3	Eaton 15201	6.33/8.81–15.000 ①
H1	Rockwell R-171	4.11–23,000
H2	Rockwell R-171	4.33–23,000
H3	Rockwell R-171	4.63–23,000
H4	Rockwell R-171	4.88–23,000
H5	Rockwell R-171	5.29–23,000
H6	Rockwell R-171	5.86–23,000
H7	Rockwell R-171	6.14–23,000
H8	Rockwell R-171	6.83–23,000
H9	Rockwell R-171	3.70–23,000
L1	Rockwell Q246	4.92–22,000
L2	Rockwell Q246	5.63–22,000
L3	Rockwell Q246	6.04–22,000
L4	Rockwell Q246	6.39–22,000
L5	Rockwell Q246	7.27–22,000
P5	Rockwell RT 241	7.21–23,000
Q1	Rockwell L-346	4.92/6.76-18,500 ①
Q4	Rockwell L-346	6.39/8.78–18,500 ①
T5	Rockwell Q346	7.33/10.07–22,000 ①
W3	Rockwell SHHD	6.17–30,000
W4	Rockwell SHHD	6.80–30,000
W5	Rockwell SHHD	7.20–30,000
X1	Rockwell RT-341	4.68/5.88–23,000 ①
X2	Rockwell RT-341	5.06/6.35–23,000 ①
X4	Rockwell RT-341	6.18/7.76–23,000 ①
X5	Rockwell RT-341	7.01/8.80–23,000 ①
Y4	Rockwell R-302	6.42/8.38–23,000 ①
Y5	Rockwell R-302	7.09/9.07–23,000 ①

① 2-Speed

700-1000 SERIES, N-500-600 AND C-550-600 (Continued)

Code	Identification	Ratio and Capacity (Pounds)
AC	Eaton 30 DSC	4.62–32,000
AD	Eaton 30 DPC	6.43–32,000
AG	Eaton 19121	4.11–23,000
AI	Eaton 38 DSC	4.56–38,000
AK	Eaton 18101	4.88–22,000
AP	Eaton 19221	4.33/5.90–23,000 ①
AR	Eaton 38 DPC	5.05–38,000
AT	Eaton 34 DTC-3	4.11/4.86/5.61–34,000 ②
AV	Eaton 42 DPC	7.60–44,000
AZ	Eaton 38 DTC	4.11/4.86/5.61–38,000 ②
BA	Rockwell SLHD Hendrickson	3.55–34,000
BB	Eaton 18201	4.56/6.21–22,000 ①
BC	Eaton 30 DSC	4.88–32,000
BD	Eaton 30 DPC	6.78–32,000
BF	Eaton 34 DSC	4.33–34,000
BG	Eaton 19121	4.33–23,000
BH	Eaton 17201	4.56/6.21–18,500 ①
BI	Eaton 38 DSC	4.88–38,000
BK	Eaton 18101	5.57–22,000
BN	Eaton 34 DPC	5.60–34,000
BP	Eaton 19221	4.88/6.64–23,000 ①
BR	Eaton 38 DPC	5.61–38,000
BT	Eaton 34 DTC-3	4.33/5.12/5.91–34,000 ②
BV	Eaton 42 DPE	8.38–44,000
BZ	Eaton 38 DTC	4.33/5.12/5.91–38,000 ②
CB	Eaton 18201	4.88/6.65–22,000 ①
CC	Eaton 30 DSC	5.57–32,000
CD	Eaton 30 DPC	7.75–32,000
CF	Eaton 34 DSC	4.56–34,000
CG	Eaton 19121	4.88–23,000
CH	Eaton 17201	4.88/6.65–18,500 ①
CI	Eaton 38 DSC	5.57–38,000
CJ	Eaton 18301	6.65–22,000
CK	Eaton 18121	6.14–22,000
CL	Eaton 30 DTC	5.57/7.75–32,000 ①
CN	Eaton 34 DPC	5.91–34,000
CP	Eaton 19221	5.43/7.39–23,000 ①
CQ	Eaton 17101	4.88–18,500
CR	Eaton 38 DPC	5.91–38,000
DB	Eaton 18201	5.57/7.60–22,000 ①
DC	Eaton 30 DSC	6.14–32,000
DF	Eaton 34 DSC	4.88–34,000
DG	Eaton 19121	5.43–23,000
DH	Eaton 17201	5.29/7.21–18,500 ①
DI	Eaton 38 DSE	6.14–38,000
DK	Eaton 18121	6.50–22,000
DL	Eaton 30 DTC	6.14/8.55–32,000 ①
DN	Eaton 34 DPC	6.21–34,000
DP	Eaton 19221	6.17/8.40–23,000 ①
DQ	Eaton 17101	5.29–18,500
DR	Eaton 38 DPC	6.21–38,000
EB	Eaton 18221	6.14/8.38–22,000 ①
EC	Eaton 30 DSC	6.50–32,000
EF	Eaton 34 DSC	5.29–34,000
EG	Eaton 19121	6.17–23,000
EH	Eaton 17201	5.57/7.60–18,500 ①
EI	Eaton 38 DSE	6.50–38,000
EK	Eaton 18121	7.17–22,000
EL	Eaton 30 DTC	6.50/9.04–32,000 ①
EN	Eaton 34 DPC	6.65–34,000
EP	Eaton 19221	6.67/9.08–23,000 ①
EQ	Eaton 17101	5.57–18,500
ER	Eaton 38 DPC	6.65–38,000

① 2-Speed ② 3-Speed

700-1000 SERIES, N-500-600 AND C-550-600 (Continued)

Code	Identification	Ratio and Capacity (Pounds)
FB	Eaton 18221	6.50/8.87–22,000 ①
FC	Eaton 30 DSC	7.17–32,000
FF	Eaton 34 DSC	5.57–34,000
FG	Eaton 19121	6.67–23,000
FH	Eaton 17221	6.14/8.38–18,500 ①
FI	Eaton 38 DSC	4.11–38,000
FK	Eaton 18101	5.29–22,000
FL	Eaton 30 DTC	7.17/9.97–32,000 ①
FN	Eaton 34 DPC	7.60–34,000
FP	Eaton 19221	3.70/5.04–23,000 ①
FQ	Eaton 17121	6.14–18,500
FR	Eaton 38 DPC	7.60–38,000
FW	Eaton 34 DTE	6.14/8.38-34,000 ①
GB	Eaton 18221	7.17/9.77–22,000 ①
GC	Eaton 30 DSC	7.60–32,000
GF	Eaton 34 DSE	6.14–34,000
GG	Eaton 19121	3.70–23,000
GH	Eaton 17221	6.50/8.87–18,500 ①
GI	Eaton 38 DSC	4.33–38,000
GN	Eaton DPE	8.38–34,000
GP	Eaton 19221	4.11/5.60–23,000 ①
GQ	Eaton 17121	6.50–18,500
GR	Eaton 38 DPE	8.38–38,000
GW	Eaton 34 DTE	6.50/8.87–34,000 ①
HB	Eaton 18201	5.29/7.21–22,000 ①
HF	Eaton 34 DSE	6.50–34,000
HG	Eaton 19121	4.56–23,000
HH	Eaton 17221	7.17/9.77–18,500 ①
HI	Eaton 38 DSC	5.29–38,000
HP	Eaton 19221	4.56/6.21–23,000 ①
HQ	Eaton 17121	7.17–18,500
HT	Eaton 34 DTC-3	3.70/4.37/5.05–34,000 ②
HW	Eaton 34 DTE	7.17/9.77–34,000 ①
IF	Eaton 34 DSE	7.17–34,000
IQ	Eaton 17121	7.60–18,500
IT	Eaton 34 DTC-3	5.29/6.25/7.21–34,000 ②
JF	Eaton 34 DSC	4.11–34,000
KF	Eaton 34 DSE	7.60–34,000
LF	Eaton 34 DSC	3.70–34,000

① 2-Speed
② 3-Speed

FRONT AXLE CODES

Code	Capacity (Pounds)
A	5,000
B	5,500
C	6,000
D	7,000
E	9,000
F	Center Point Steering 12,000
G	12,000
H	15,000
I	18,000
J	(Limited Slip) 2,500
K	3,500

Brakes

2

PART 2-1 PAGE
General Brake Service 02-01
PART 2-2
Hydraulic Drum Brakes 02-02
PART 2-3
Hydraulic Disc Brakes 02-03
PART 2-4
Parking Brakes 02-04
PART 2-5
Vacuum Booster 02-05
PART 2-6
Air Supply System 02-06
PART 2-7
Air Brakes 02-07

PART 2-1 *General Brake Service*

COMPONENT INDEX	Model Application												
	ALL MODELS	Econoline & Bronco	P-350-400, 3500-4000	P-500, 5000	B-500-750, 6000-7000	F-100-350	F-500-950, 6000-7000	F-1000, 8000-950D-1000-D	T-800-950, 8000, 850-D-950D	C-550-950, 6000-7000	C-1000, 8000 CT 800-950	N-500-750, 6000-7000	N-850-1000, 8000-1000D NT Series W & WT Series
BRAKE DRUM													
Cleaning and Inspection	01-07												
Removal and Installation		02-10	02-10	01-06	01-06	02-10	01-06	01-06	01-06	01-06	01-06	01-06	01-06
Repair	01-06												
BRAKE PEDAL ADJUSTMENT ③		N/A	N/A	01-05	N/A	N/A	01-05	N/A	01-05	01-05	N/A	01-05	N/A
BRAKE SHOE													
Cleaning and Inspection	01-07												
Relining	01-06												
CAM TYPE AIR BRAKE CLEANING AND INSPECTION ⑤		N/A	N/A	N/A	01-08	N/A	01-08	01-08	01-08	01-08	01-08	01-08	01-08
DISC BRAKES													
Adjustment ①		N/A	N/A	N/A	N/A	01-06	N/A	N/A	N/A	N/A	N/A	N/A	N/A
Cleaning and Inspection ①		N/A	N/A	N/A	N/A	01-07	N/A	N/A	N/A	N/A	N/A	N/A	N/A
MASTER CYLINDER CLEANING AND INSPECTION ③		01-07	01-07	01-07	01-07	01-07	01-07	N/A	01-07	01-07	N/A	01-07	N/A
VACUUM BOOSTER													
Adjustment (Air Check) ④			N/A	N/A	N/A	N/A	01-05	N/A	N/A	N/A	N/A	01-05	N/A
Cleaning and Inspection ③			01-08	01-08	01-08	01-08	01-08	N/A	01-08	01-08	N/A	01-08	N/A
TESTS													
Air Brake System													

A page number indicates that the item is for the vehicles listed at the head of the column.
N/A indicates that the item is not applicable to the vehicles listed.

COMPONENT INDEX	Model Application												
	ALL MODELS	Econoline & Bronco	P-350-400, 3500-4000	P-500, 5000	B-500-750, 6000-7000	F-100-350	F-500-950, 6000-7000	F-1000, 8000-950D-1000D	T-800-950, 8000, 850D-950D	C-550-950, 6000-7000	C-1000, 8000 CT 800-950	N-500-750, 6000-7000	N-850-1000, 8000-1000D NT Series W & WT Series
Control Valve ⑤		N/A	N/A	N/A	01-05	N/A	01-05	01-05	01-05	01-05	01-05	01-05	01-05
Quick Release Valve ⑤		N/A	N/A	N/A	01-04	N/A	01-04	01-04	01-04	01-04	01-04	01-04	01-04
Relay Valve		N/A	N/A	N/A	N/A	N/A	N/A	N/A	01-04	N/A	01-04	N/A	01-04
Service Chamber ⑤		N/A	N/A	N/A	01-05	N/A	01-05	01-05	01-05	01-05	01-05	01-05	01-05
Stop Light Switch ⑤		N/A	N/A	N/A	01-04	N/A	01-04	01-04	01-04	01-04	01-04	01-04	01-04
Air Supply System													
Air Compressor ⑤		N/A	N/A	N/A	01-04	N/A	01-04	01-04	01-04	01-04	01-04	01-04	01-04
Governor, Air Compressor ⑤		N/A	N/A	N/A	01-04	N/A	01-04	01-04	01-04	01-04	01-04	01-04	01-04
Low Pressure Indicator ⑤		N/A	N/A	N/A	01-04	N/A	01-04	01-04	01-04	01-04	01-04	01-04	01-04
Moisture Ejector Valve, Air Reservoir ②		N/A	N/A	N/A	N/A	N/A	N/A	N/A	N/A	N/A	N/A	N/A	01-04
Safety Valve, Air Reservoir ⑤		N/A	N/A	N/A	01-04	N/A	01-04	01-04	01-04	01-04	01-04	01-04	01-04
Hydraulic Brake System													
Check Valve, Vacuum Booster ③		N/A	01-03	01-03	01-03	01-03	01-03	N/A	01-03	01-03	N/A	01-03	N/A
Dual Brake Warning Light		01-03	01-03	N/A	01-03	01-03	01-03	N/A	N/A	01-03	N/A	01-03	N/A
Power Brake Function Test ③		N/A	01-03	01-03	01-03	01-03	01-03	N/A	01-03	01-03	N/A	01-03	N/A
Preliminary Checks ③		01-02	01-02	01-02	01-02	01-02	01-02	N/A	01-02	01-02	N/A	01-02	N/A
Vacuum Booster ③		N/A	01-03	01-03	01-03	01-03	01-03	N/A	01-03	01-03	N/A	01-03	N/A
WHEEL CYLINDER CLEANING AND INSPECTION ③		01-07	01-07	01-07	01-07	01-07	01-07	N/A	01-07	01-07	N/A	01-07	N/A

A page number indicates that the item is for the vehicles listed at the head of the column.
N/A indicates that the item is not applicable to the vehicles listed.

① Does not apply to F-100 ② Does not apply to W & WT Series ③ Does not apply to T-950, 8000, 850-D, and 950-D
④ F & N 500-600 Series with dash mounted booster ⑤ Does not apply to F, N, & B 500 or C550 Series

1 TESTING

A new improved Ford Truck Diagnosis Manual is in preparation. Until it becomes available, use the diagnosis information in your 1968 Ford Truck Shop Manual.

Hydraulically operated service brakes are standard equipment on all 100 through 800 Series and on some 850 and 950 Series Ford trucks.

Automatic brake shoe adjusters are used on all 100 through 950 Series Ford trucks with hydraulic brakes.

A dual-master cylinder brake system is used as standard equipment on F-100 through F-350, E-100 through E-300, Bronco, and P-350-400-3500-4000 vehicles. The dual-master cylinder is also used on F-500-950, N-500-750, C-550-950, F-6000-7000, N-6000-7000, C-6000-7000 and B-500-750 Series vehicles equipped with split-hydraulic brakes.

Front disc brakes are available on F-250 and F-350 trucks.

The standard hydraulic brake system on some vehicles may be assisted by a vacuum booster installed as either standard or optional equipment. Service information on the vacuum booster unit is given in Part 2-5.

The full air brake system, optional on some models and standard on most 850 through 1000 models, is covered in Part 2-7. Automatic brake shoe adjusters are also included on some air brake systems.

HYDRAULIC BRAKE SYSTEM TESTS

BRAKE SYSTEM PRELIMINARY CHECKS

Always check the fluid level in the

brake master cylinder reservoir(s) before performing the test procedures. If the fluid level is not within 1/4 inch of the top of the master cylinder reservoirs, add the specified brake fluid.

Push the brake pedal down as far as it will go. If the pedal travels more than halfway between the released position and the floor, adjust the brakes. If the vehicle is equipped with automatic brake adjusters, several sharp brake applications while backing up may be necessary to adjust the brakes.

Road test the vehicle and apply the brakes at a speed of about 20 mph to see if the vehicle stops evenly. If not, the brakes should be adjusted. **Perform the road test only when the brakes will apply and the vehicle can be safely stopped.**

DUAL BRAKE WARNING LIGHT SYSTEM TESTS

1. Turn the ignition switch to the ACC or ON position. If the light on the brake warning lamp remains on, the condition may be caused by a shorted or broken switch, grounded switch wires or the differential pressure valve is not centered. Centralize the differential pressure valve as outlined under Hydraulic System Bleeding and Centralizing of the Differential Valve in this section of the manual. If the warning light remains on, check the switch connector and wire for a grounded condition and repair or replace the wire assembly. If the condition of the wire is good, replace the brake warning lamp switch.

2. Turn the ignition switch to the start position. If the brake warning lamp does not light, check the light and wiring and replace or repair wiring as necessary.

When both brake systems are functioning normally, the equal pressure at the pressure differential valve during brake pedal application keeps the valve centered. The brake warning light will be on only when the ignition key is in the **START** position.

3. If the brake warning lamp does not light when a pressure differential condition exists in the brake system, the warning lamp may be burned out, the warning lamp switch is inoperative or the switch to lamp wiring has an open circuit. Check the bulb and replace it, if required. Check the switch to lamp wires for an open circuit and repair or replace them, if required. If the warning lamp still does not light, replace the switch.

POWER BRAKE FUNCTION TEST

With the engine stopped, eliminate all vacuum from the system by pumping the brake pedal several times. Then push the pedal down as far as it will go, and note the effort required to hold it in this position. If the pedal gradually moves downward under this pressure, the hydraulic system is leaking and should be checked by a hydraulic pressure test.

With the brake pedal still pushed down, start the engine. If the vacuum system is operating properly, the pedal will move downward. If the pedal position does not change, the vacuum system is not operating properly and should be checked by a vacuum test.

VACUUM BOOSTER CHECK VALVE TEST

Disconnect the line from the bottom of the vacuum check valve, and connect a vacuum gauge to the valve. Start the engine, run it at idle speed, and check the reading on the vacuum gauge.

The gauge should register 17-19 inches with standard transmission and 14-15 inches in Drive range if equipped with an automatic transmission. Stop the engine and note the rate of vacuum drop. If the vacuum drops more than one inch in 15 seconds, the check valve is leaking. If the vacuum reading does not reach 18 inches or is unsteady, an engine tune-up is needed.

Remove the gauge and reconnect the vacuum line to the check valve.

VACUUM BOOSTER TEST—BENDIX PISTON TYPE

Disconnect the vacuum line from the booster end plate. Install a tee fitting in the end plate, and connect a vacuum gauge (No. 1) and the vacuum line to the fitting. Install a second vacuum gauge (No. 2) in place of the pipe plug in the booster control valve body.

Start the engine, and note the vacuum reading on both gauges. If both gauges do not register manifold vacuum, air is leaking into the vacuum system. If both gauges register manifold vacuum, stop the engine and note the rate of vacuum drop on both gauges. If the drop exceeds one inch in 15 seconds on either gauge, air is leaking into the vacuum system. Tighten all vacuum connections and repeat the test. If leakage still exists, the leak may be localized as follows:

1. Disconnect the vacuum line and gauge No. 1 from the booster.

2. Connect vacuum gauge No. 1 directly to the vacuum line. Start the engine and note the gauge reading. Stop the engine and check the rate of vacuum drop. If gauge No. 1 does not register manifold vacuum, or if the vacuum drop exceeds 1 inch in 15 seconds, the leak is in the vacuum line or check valve connections.

3. Reconnect vacuum gauge No. 1 and the vacuum line to the tee fitting. Start the engine, and run it at idle speed for one minute. Depress the brake pedal sufficiently to cause vacuum gauge No. 2 to read from zero to 1 inch of vacuum. Gauge No. 1 should register manifold vacuum of 17-19 inches with standard transmission and 14-16 inches in Drive range if equipped with an automatic transmission. If the drop of vacuum on gauge No. 2 is slow, the air cleaner, or air cleaner line, may be plugged. Inspect and if necessary, clean the air cleaner.

4. Release the brake pedal and observe the action of gauge No. 2. Upon releasing the pedal, the vacuum gauge must register increasing vacuum until manifold vacuum is reached. The rate of increase must be smooth, with no lag or slowness in the return to manifold vacuum. If the gauge readings are not as outlined, the booster is not operating properly and should be removed and overhauled.

VACUUM BOOSTER TEST—DIAPHRAGM TYPE

This procedure can be used to test all diaphragm boosters which are equipped with a pipe thread outlet on the atmosphere portion of the diaphragm chamber.

Remove the pipe plug from the rear half of the booster chamber, and install a vacuum gauge. Start the engine and run it at idle speed. The gauge should register 18-21 inches of vacuum.

1. With the engine running, depress the brake pedal with enough pressure to show a zero reading on the vacuum gauge. Hold the pedal in the applied position for one minute. Any downward movement of the pedal during this time indicates a brake fluid leak. Any kickback (upward movement) of the pedal indicates brake fluid is leaking past the hydraulic piston check valve.

2. With the engine running, push down on the brake pedal with sufficient pressure to show a zero reading on the vacuum gauge. Hold the pedal

down, and shut the engine off. Maintain pedal position for one minute. A kickback of the pedal indicates a vacuum leak in the vacuum check valve, in the vacuum line connections, or in the booster.

AIR SUPPLY SYSTEM

The air supply system is used with the full air brake system (Part 2-7). In the full air system, air pressure is applied directly to the shoes through a diaphragm and mechanical linkage.

If the brake system is not operating properly, the air supply system should be checked first.

OPERATING TESTS

Before performing any of the following tests, operate the engine until the air pressure builds up to 90 psi. With the air brake system charged, open the drain cocks in each reservoir. Close the drain cocks after all moisture is drained from the reservoirs. Some models have automatic moisture ejector valves and do not require manual draining.

Low Pressure Indicator

Exhaust the brake system pressure and observe the pressure at which the warning buzzer sounds. The contacts in the indicator should close the circuit to the buzzer, when reservoir pressure is between 58 psi minimum and 65 psi maximum. If the buzzer does not start to sound within this pressure range during discharge, or if a sounding buzzer does not stop within this pressure range during the pressure buildup, the electrical connections are loose or the indicator valve is not operating properly.

Reservoir Safety Valve

To determine if the safety valve is operative, pull the exposed end of the valve stem. If the safety valve does not blow off when the stem is pulled, the valve ball is probably stuck in its seat. In such a case, remove and disassemble the valve for cleaning.

Automatic Moisture Ejector Valve

With the system charged, make several foot valve applications and note each time an application is made if an exhaust of air occurs at the exhaust port of the drain valve. If no air comes out, push the wire stem. If no air comes out, the filter is plugged and the valve should be removed and cleaned.

Note: Because the automatic moisture ejector valve functions as reservoir pressure is reduced, excessive leakage in the system will cause constant exhausting of the valve.

Governor

With the engine running, build up air pressure in the system, and observe at what pressure reading on the dash gauge the pressure stops climbing. This is the point of governor cutout which should be between 118 and 125 pounds.

With the engine still running, slowly reduce the air pressure in the system by applying and releasing the brakes. Observe the pressure reading on the dash gauge at the point where the pressure starts to build up again. This is the point of governor cut-in which should be between 98 and 104 pounds.

If the governor does not cut the compressor in and out according to these specifications, adjust the governor pressure settings. Before adjusting the governor, check the accuracy of the dash gauge with a test gauge.

Check Pressure Build-Up

With the engine running at fast idle speed, observe the time required to raise system pressure from 50 to 90 pounds. If more than five minutes is required, perform the leak tests as outlined in the following paragraphs.

Also check for low engine idle speed, a slipping compressor drive belt, excessive carbon in the compressor cylinder head, or a worn out air compressor.

LEAK TESTS

Compressor

With the engine stopped, discharge valve leakage can be detected by carefully listening at the compressor for the sound of escaping air. With air pressure applied to the unloader cavity (with governor cut-out), remove the air filter or the air pick up tube on SD V-8 engines and check for air leaks by squirting oil around the unloader plunger and stem. If excessive air leaks are found, replace the unloader mechanism.

Governor

With the governor in the cutout position, test for leakage at the exhaust valve by applying soap suds to the exhaust vent in the body.

With the governor in the cut-in position, test for leakage of the inlet valve by applying soap suds to the exhaust vent in the body.

In either of the foregoing tests, leakage in excess of 1-inch soap bubble in three seconds indicates the governor should be replaced.

Reservoir Safety Valve

Coat the end of the safety valve with soap suds. Leaks causing not more than a 3-inch soap bubble in three seconds are permissable.

Automatic Moisture Ejector Valve

With the system charged and pressure stabilized in the system, there should be no leaks at the drain valve exhaust. A constant slight exhaust of air at the drain valve exhaust could be caused by excessive leakage in the air brake system.

AIR BRAKES

Some of the air brake system components vary slightly from one vehicle model to another in design or location. However, all components are essentially the same in principle and service procedure.

OPERATING TESTS

Check Stop Light Switch

With all air pressure exhausted from the air brake system, start the engine and move the brake valve to the applied position. Stop lights should light before the dash gauge registers 5 psi pressure. Release the brakes.

Quick Release Valve and Relay Valve

With the air brake system fully charged, apply the brakes. Inspect the brake action on the wheels controlled by the quick release valve or relay

valve in question. The brakes should apply promptly. Release the brakes and inspect to be sure that the air pressure is exhausted rapidly from the exhaust port. Be sure the exhaust port is not restricted.

LEAK TESTS

With the engine stopped and the brakes fully applied, watch the rate of drop in air pressure as registered by the dash gauge. With the engine stopped and the reservoirs charged to the governor cutout pressure (118-125 psi), the rate of drop should not exceed 2 psi per minute. The rate of drop should also not exceed 3 psi per minute after the initial drop with brakes fully applied. If the pressure drops faster than specified, check the items outlined in the following paragraphs.

Brake Control Valve

With the pedal fully released, coat the exhaust port with soap suds to check for leaks. With the pedal fully applied, coat the exhaust port with soap suds and check for leaks. Leaks causing not more than a three inch soap bubble in three seconds are permissable.

Brake Chambers

With the brakes fully applied, coat the clamp ring and bolt flanges holding the diaphragm in place with soap suds. No leaks are permissable.

Quick Release Valve

With brakes applied, coat the exhaust port with soap suds to detect leakage. Leakage in excess of a 3-inch soap bubble in three seconds is not permissable.

Relay Valve

With the brakes **released,** coat the exhaust port with soap suds and observe the leakage.

With the brakes fully **applied,** coat the exhaust port with soap suds and observe the leakage.

Leakage in either of the foregoing tests should not exceed a 3 inch soap bubble in three seconds.

2 COMMON ADJUSTMENTS AND REPAIRS

AIR CHECK OF BOOSTER PUSH ROD ADJUSTMENT—MIDLAND ROSS BOOSTER (DASH MOUNTED—HEAVY TRUCKS ONLY)

Whenever the master cylinder or booster has been repaired or replaced, the brake system must be checked for proper return flow of hydraulic brake fluid from the wheel cylinders to the reservoir of the master cylinder. This check will assure that the brake booster to master cylinder push rod is properly adjusted to allow the master cylinder compensating valve to open when the brake pedal is in the fully-released position.

The air check is made after the brake booster and master cylinder has been installed and before the master cylinder primary hydraulic line connection is made and the reservoir is filled with brake fluid.

1. Connect the brake vacuum line to the vacuum booster, if required. Start the engine.

2. Position the nozzle of an air hose to the master cylinder primary discharge port. Place a hand over the master cylinder reservoir and apply air pressure through the air hose nozzle.

If free passage air pressure is felt on the hand located over the master cylinder reservoir, the brake booster push rod is properly adjusted.

If no air pressure is felt on the hand located over the reservoir, the master cylinder must be removed and the push rod length shortened. To shorten the push rod length, turn the acorn-type screw on the brake booster push rod inward, one turn at a time, until the air check shows the brake master cylinder compensating valve is open.

BRAKE PEDAL ADJUSTMENT

On dual-brake master cylinder or dash mounted vacuum booster equipped vehicles, the brake systems are designed to permit full stroke of the master cylinder when the brake pedal is fully depressed. A brake pedal clearance adjustment is not required.

In order to release the brakes, fluid in a hydraulic brake system must flow back to the master cylinder when pedal pressure is released. A port is provided in the master cylinder to allow this flow, but the piston must move back far enough to expose the return port. To be sure that this will always happen, free-travel is built into the pedal linkage on single master cylinders with non-power brakes or frame-mounted booster systems. This free-travel prevents the piston from becoming trapped in a partially released position. Pedal free travel is not always perceptible in dash-mounted booster systems, however, because the operating clearance for the piston is adjusted at the booster push-rod, rather than the pedal linkage. (Refer to Part 2-5 for instructions on dash-mounted booster push-rod adjustments).

Pedal free travel is not adjustable on 500-700 series trucks with a dash-mounted booster and a single or dual system or units with a dual system and a frame-mounted booster.

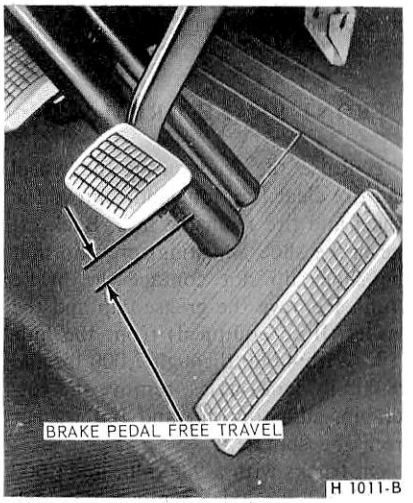

FIG. 1—Pedal Free Travel Check

If the pedal free travel in a standard hydraulic brake system or frame mounted hydraulic booster system is less than 3/16 inch or more than 3/8 inch (Fig. 1), the pedal should be adjusted.

To adjust free-travel:

1. Push the brake pedal down by hand pressure, and check the free travel.

2. Loosen the lock nut on the eccentric bolt, and rotate the eccentric bolt until the free travel is within 3/16-3/8 inch.

On a P-Series truck, turn the hex head of the push rod to obtain the required free-travel.

3. Hold the bolt securely, and torque the lock nut to 30-35 ft-lbs.

4. Recheck the pedal free-travel to make sure that the adjustment did not change when the lock nut was tightened.

FRONT DISC BRAKES F-250 AND F-350

The front disc brake assembly is designed so that it is inherently self-adjusting. Refer to Part 2-3, Removal and Installation, Section 3 or Major Repair Operations, Section 4 for the required service procedures.

BRAKE DRUM REMOVAL AND INSTALLATION THROUGH 1000 SERIES

The service procedures covered here apply to both hydraulic and air brakes. Since the F-100 through 350, E-100 through 300, Bronco or the P-350, 400, 3500 and 4000 (front and rear) and the 4-wheel drive front brake drum procedures apply to hydraulic brakes only, they are covered in Section 3 of Part 2-2.

FRONT BRAKE DRUM

1. Raise the truck until the wheel and tire clear the floor and remove the wheel and tire from the hub. Back off the brake shoe adjusting screw so that the shoes do not contact the brake drum. Remove the grease cap and the gasket (if so equipped) from the hub.

2. With 4,000 through 7,000 lb. and 18,000 lb. front axles, remove the cotter pin, adjusting nut and flat washer from the spindle.

On trucks with a 9,000 lb. or 11,000 or 15,000 lb. axle, remove the lock nut, the dimpled washer, the locking ring and the adjusting nut and pin assembly.

3. Remove the outer bearing cone and roller. Pull the hub and drum assembly off the wheel spindle.

4. Remove the front wheel to hub retaining nuts or rim and tire attaching nuts. Remove the wheel or rim and tire from the hub and drum.

5. Remove the brake drum retainers and attaching bolts, screws, or bolts and nuts.

6. Remove the brake drum from the hub.

7. Check the drum for damage or wear, and repair or replace as necessary. If a new drum is to be installed, be sure to remove the protective coating with a suitable degreaser.

New grease retainer seals should be installed whenever a wheel and hub is removed.

8. Place the brake drum to the hub and install the retainers and retaining bolts, screws, or bolts and nuts.

9. Install the hub and drum on the wheel spindle. **Keep the hub centered on the spindle to prevent damage to the grease retainer or the spindle threads.**

10. With 4,000 through 7,000 lb. and 18,000 lb. front axles, install the outer bearing cone and roller and the flat washer on the spindle, then install the adjusting nut. With front axles of 9,000 lbs., 11,000 or 15,000 lbs. capacity, install the outer bearing cone and roller and the bearing adjusting nut and pin assembly.

11. Install the wheel and tire on the hub, then install the clamps (if applicable) and the wheel stud nuts.

12. Torque the adjusting nut to specifications while rotating the wheel. Refer to Group 3 for the wheel bearing adjustment procedure.

Install the dimpled washer with the dimple indexed in one of the holes in the adjusting nut. Install the lock nut and torque to specifications. Bend the dimpled washer over a flat of the lock nut.

13. Install the gasket (if so equipped) and the grease cap, and torque the wheel stud nuts to specifications. Install the hub cap if so equipped, and adjust the brakes.

REAR BRAKE DRUM

1. Raise the truck and install stands.

2. Remove the wheel and tire as an assembly. Then back off the rear brake shoe adjustment.

3. Remove the rear axle shaft retaining nuts, adapters, axle shaft, and grease seal.

4. Remove the wheel bearing locknut, lock washer, and adjusting nut.

5. Remove the hub and drum from the axle.

6. Remove the brake drum to hub retaining screws, bolts, or bolts and nuts. Then remove the brake drum from the hub.

7. Check the drum for damage or wear, and repair or replace as necessary. If a new drum is to be installed, be sure to remove the protective coating with a suitable degreaser.

New grease retainer seals (and wear sleeves if applicable) should be installed whenever a wheel and hub is removed.

8. Position the brake drum to the hub and install the attaching screws, bolts, or bolts and nuts.

9. Position the hub and drum as an assembly on the axle and start the adjusting nut.

10. Adjust the wheel bearing nut and then install the wheel bearing lock washer and locknut.

11. Install a new rear axle oil seal, axle shaft and gasket, stud adapters, and attaching nuts.

12. Install the wheel and tire as an assembly.

13. Adjust the brake shoes and then remove the stand and lower the truck.

BRAKE DRUM REFINISHING

Minor scores on a brake drum can be removed with fine emery cloth, provided the emery is thoroughly cleaned off the drum after the operation.

A badly scored, rough, or out- of-round drum should be ground or turned on a drum lathe. Do not remove any more material from the drum than is necessary to provide a smooth surface for the brake shoe contact. Brake drums up to and including 14 1/8 inches nominal diameter are considered unsatisfactory for further service use if the original inside diameter has increased more than .090 inch. These drums should not be machined to more than .060 inch beyond the original diameter or allowed to wear more than an additional .030 inch.

Brake drums larger than 14 1/8 inches nominal diameter are considered unsatisfactory for further service use if the original inside diameter has increased more than .120 inch. These drums should not be machined to more than .080 inch beyond the original diameter or allowed to wear more than an additional .040 inch.

If the diameter of the drum is less than .030 inch oversize after refinishing, install standard linings on the brake assemblies. If the diameter is over 0.030 inch, install oversize or shimmed linings.

BRAKE SHOE AND BAND RELINING

1. Remove the rivets and remove the old lining.

2. Clean the shoe or band thoroughly with cleaning fluid, especially the rim surface. Wipe the shoe or band dry and remove all burrs or rough spots from the shoe.

3. On service brake, check the inside diameter of the brake drum. If the diameter is less than 0.030 inch

oversize, install standard linings. If the diameter is 0.030-0.060 inch oversize, install oversize or shimmed linings.

4. Position the new lining on the shoe or band and install new rivets, beginning with the rivet holes near the center of the shoe. On some vehicles, the primary lining is shorter than the secondary lining. If this condition exists, position the shorter (primary) lining to line up with the heel end of the shoe. **Do not let brake fluid oil or grease touch the brake lining. If a brake lining kit is used to replace the worn linings, install all the parts supplied in the kit.**

5. Check the clearance between the lining and shoe rim. The lining must seat snugly against the rim with not more than 0.005 inch separation midway between any two rivets. If only the linings are replaced on duo-servo single anchor brakes with fixed anchor pins, the brake linings must be cam ground 0.010 inch at the ends after the linings are riveted to the brake shoe.

3 CLEANING AND INSPECTION

FRONT DISC BRAKES

1. Remove the wheel and tire, brake shoe retainers, and the shoe and linings as outlined in Part 2-3, Section 3.

2. Make three thickness measurements with a micrometer across the middle section of the shoe and lining. Take one reading at each side and one in the center. If the assembly has worn to a thickness of 0.210 inch (Shoe and lining together) at any one of the three measuring locations, or if the lining shows evidence of brake fluid or oil contamination that is causing a brake pull, replace all four lining assemblies.

3. Check caliper to spindle attaching bolt torque. Torque them to specification if required.

4. To check rotor runout, first eliminate the wheel bearing end play by tightening the adjusting nut. After tightening the nut, check to see that the rotor can still be rotated.

5. Clamp a dial indicator to the spindle so that the stylus contacts the rotor at a point approximately 1 inch from the outer edge. Rotate the rotor and take an indicator reading. If the reading exceeds 0.010 inch total lateral runout on the indicator, replace or resurface the disc brake rotor. **The following requirements must be met when resurfacing disc brake rotors (Fig. 2).**

Rotunda Disc Brake Attachment FRE-2249-2 is the **only approved** tool to be used to refinish the disc brake rotors. The step-by-step resurfacing procedure provided with the tool must be adhered to.

A maximum of 0.020 inch material may be machined equally off each surface (A and B) maintaining a 0.940 inch minimum thickness.

The finished braking surfaces of the rotor must be flat and parallel within 0.001 inch; lateral runout must not exceed 0.003 inch total indicator reading, and the surface finish of the braking surfaces are to be 15-80 micro inches.

When the runout check is finished, be sure to adjust the bearings as outlined in Group 3, in order to prevent bearing failure.

6. Check the rotor for scoring and cracks. Normal concentrically grooved rotors are acceptable for running with new replacement shoe and lining assemblies. If the rotor is excessively scored, refinish it as outlined in step 5 or replace the rotor if required. If the rotor is cracked it must be replaced.

7. Visually check the caliper assembly. If it is cracked or if any leakage is evident, it should be replaced. Any leakage around the dust boot indicates the need for removal and disassembly.

8. Check brake hoses for signs of cracking, leaks, or abrasion. Replace if necessary.

BRAKE CYLINDER

1. Clean all brake cylinder parts in clean isopropyl alcohol. Inspect all parts for wear or damage. Check the cylinder bore for rust, scores, or other damage. Be sure that the bleeder screw passage is clean and open. Replace all parts that are worn or damaged.

2. If dirt is found in any part of the hydraulic system, flush the entire system with clean isopropyl alcohol.

MASTER CYLINDER

1. Clean all master cylinder parts in clean isopropyl alcohol, and inspect the parts for wear or damage, replacing them as required. **When a master cylinder repair kit is used, install all of the parts supplied in the kit.**

2. Check the ports and vents in the master cylinder to make sure that all are open and free of foreign matter.

3. On a single brake system master cylinder, check the spring valve (riveted to the front end of the piston). If the spring valve is loose or has moved so that the piston ports are open, replace the piston.

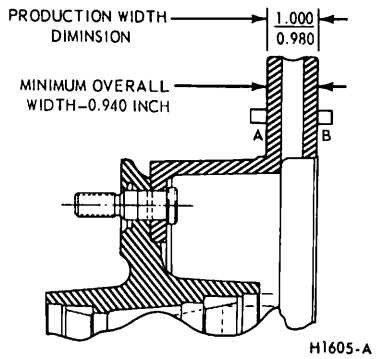

FIG. 2—Disc Brake Rotor Service Limits

4. Inspect the cylinder walls for scores or rust, and recondition them if necessary. Hone the cylinder walls no more than necessary (0.003 inch maximum), either to remove scores and rust, or to obtain a smooth wall surface. Remove any burrs or loose metal that may have resulted from the honing operation, and clean the cylinder with clean isopropyl alcohol.

BRAKE DRUMS AND LININGS

1. After removing one front wheel and drum and one rear wheel and drum from the vehicle, inspect the drums, retracting springs, and brake shoe linings for wear or damage that would affect brake operation. **Do not let brake fluid, oil or grease touch the drum or linings.**

2. A brake shoe should be relined when the lining face is worn to within 1/32 inch of any rivet head, or when the lining has been soaked with brake fluid, oil or grease. If a worn lining is not replaced, the brake drum may become severely damaged. **Always replace the primary and secondary brake shoe lining assemblies on both front or both rear brake assemblies at the same time.**

3. Before relining a brake shoe, inspect the shoe for distortion, cracks,

or looseness between the rim and web. If one of these conditions exists, replace the shoe. **Do not attempt to repair a damaged brake shoe.**

4. If the drum and linings are in good condition, install the wheel and drum. **The condition of the drums and linings of the opposite wheel will usually be about the same as that found at the wheel that was removed.**

5. Add enough of the specified brake fluid to the master cylinder reservoir to bring the level to within 1/4 inch of the top of the filler neck.

6. Check to be sure that the parking brake handle is fully released before making any brake adjustment.

7. Check the front brake anchor pin nut with a wrench (on brake assemblies with an adjustable anchor pin). If the bolt is loose, torque it to 80-100 ft-lbs.

BRAKE BOOSTER

1. After disassembly, immerse all metal parts in a suitable cleaning solvent and dry them with compressed air. Use only isopropyl alcohol on rubber parts or parts containing rubber. After the parts have been thoroughly cleaned and rinsed in cleaning solvent, the metal parts which come in contact with hydraulic brake fluid should be rewashed in clean isopropyl alcohol before assembly. Use an air hose to blow dirt and cleaning fluid from the recesses and internal passages. When overhauling a power booster, use all parts furnished in the repair kit. **Discard all old rubber parts.**

2. Inspect all other parts for damage or excessive wear. Replace damaged or excessively worn parts. If the inside of the booster body is rusted or corroded, polish it with steel wool or fine emery cloth. On piston type boosters, replace the body shell when scored. Inspect the master cylinder bore for signs of scoring, rust, pitting or etching. Any of these conditions will require replacement of the cylinder.

CAM-TYPE AIR BRAKES

1. Inspect the camshaft bushings and replace if worn or damaged.

2. Check the anchor pins and shoe-to-cam rollers for wear or damage, and replace, if required.

3. Check thickness of the brake lining at the center of the shoe, and replace, if necessary.

4. Clean, inspect, and replace worn or damaged parts. Coat the anchor pins and cam lobes with Lubriplate before installing the shoes.

PART 2-2 *Hydraulic Drum Brakes*

COMPONENT INDEX	Model Application									
	Bronco	Econoline	P-350-400, 3500-4000	P-300, 5000	B-500-750, 6000-7000	F-100-350	F-500-750, 6000-7000	T-800-850	C-550-950, 6000-7000	N-500-750, 6000-7000
BLEEDING, HYDRAULIC SYSTEM	02-07	02-07	02-07	02-07	02-07	02-07	02-07	02-07	02-07	02-07
BRAKE BACKING PLATE										
Removal and Installation	02-18	02-18	02-18	02-18	02-18	02-18	02-18	02-18	02-18	02-18
BRAKE DRUM										
Cleaning and Inspection-See Part 2-1										
Removal and Installation	02-10	02-10	02-10	01-06	01-06	02-10	01-06	01-06	01-06	01-06
Repair - See Part 2-1										
BRAKE PEDAL										
Removal and Installation	02-24	02-24	02-24	02-24	02-24	02-24	02-24	02-24	02-24	02-24
BRAKE SHOES										
Adjustments	02-06	02-06	02-06	02-06	02-06	02-06	02-06	02-06	02-06	02-06
Cleaning and Inspection - See Part 2-1										
Repair - See Part 2-1										
BRAKE WHEEL CYLINDER										
Cleaning and Inspection - See Part 2-1										
Disassembly and Overhaul	02-27	02-27	02-27	02-27	02-27	02-27	02-27	02-27	02-27	02-27
Removal and Installation	02-18	02-18	02-18	02-18	02-18	02-18	02-18	02-18	02-18	02-18
DESCRIPTION	02-01	02-01	02-01	02-01	02-01	02-01	02-01	02-01	02-01	02-01
HYDRAULIC LINE REPAIR	02-09	02-09	02-09	02-09	02-09	02-09	02-09	02-09	02-09	02-09
MASTER CYLINDER										
Cleaning and Inspection - See Part 2-1										
Disassembly and Overhaul	02-28	02-28	02-28	02-28	02-28	02-28	02-28	02-28	02-28	02-28
Removal and Installation	02-19	02-19	02-19	02-19	02-19	02-19	02-19	02-19	02-19	02-19
PRESSURE DIFFERENTIAL VALVE										
Adjustment	02-09	02-09	02-09	N/A	02-09	02-09	02-09	02-09	02-09	02-09
Removal and Installation	02-24	02-24	02-24	N/A	02-24	02-24	02-24	02-24	02-24	02-24

page number indicates that the item is for the vehicles listed at the head of the column.
N/A indicates that the item is not applicable to the vehicles listed.

1 DESCRIPTION

DUAL-MASTER CYLINDER BRAKE SYSTEM

A dual-master cylinder brake system (Figs. 1 and 2) is used on all F-100 through 350, E-100 through 300, Bronco, and P-350-400-3500-4000 and B-500-750 Series Models and is available on certain 500-950 Series Models.

A code letter is stamped on the side of each dual-master cylinder body casting (except F and N-Series with a dash-mounted booster) for easy service identification. The truck models, type of brakes and the identification code letters are shown on the dual-master cylinder identification chart (Fig. 3).

The dual, master cylinder contains a double hydraulic cylinder with two fluid reservoirs, two hydraulic pistons (a primary and secondary) and two residual check valves, located in the outlet ports (Fig. 4). The master cylinder secondary systems outlet port is connected to the secondary hydraulic circuit and the primary system brake outlet port is connected to the primary hydraulic circuit.

The master cylinder primary and secondary pistons function together when the primary and secondary systems are fully operative.

Brake lines (tubes) are connected from the brake master cylinder primary and secondary system outlet ports to the pressure differential valve

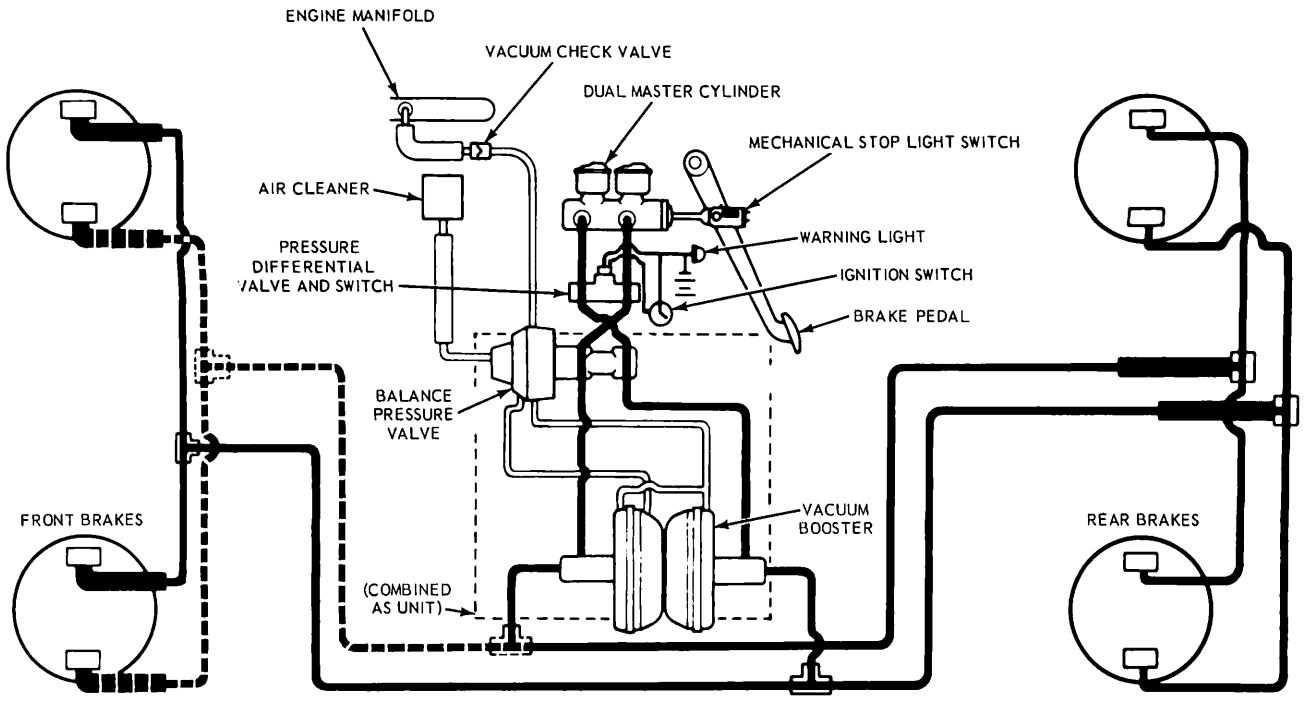

FIG. 1—Split Hydraulic Brake System Schematic 500-850 Series With Frame-Mounted Booster

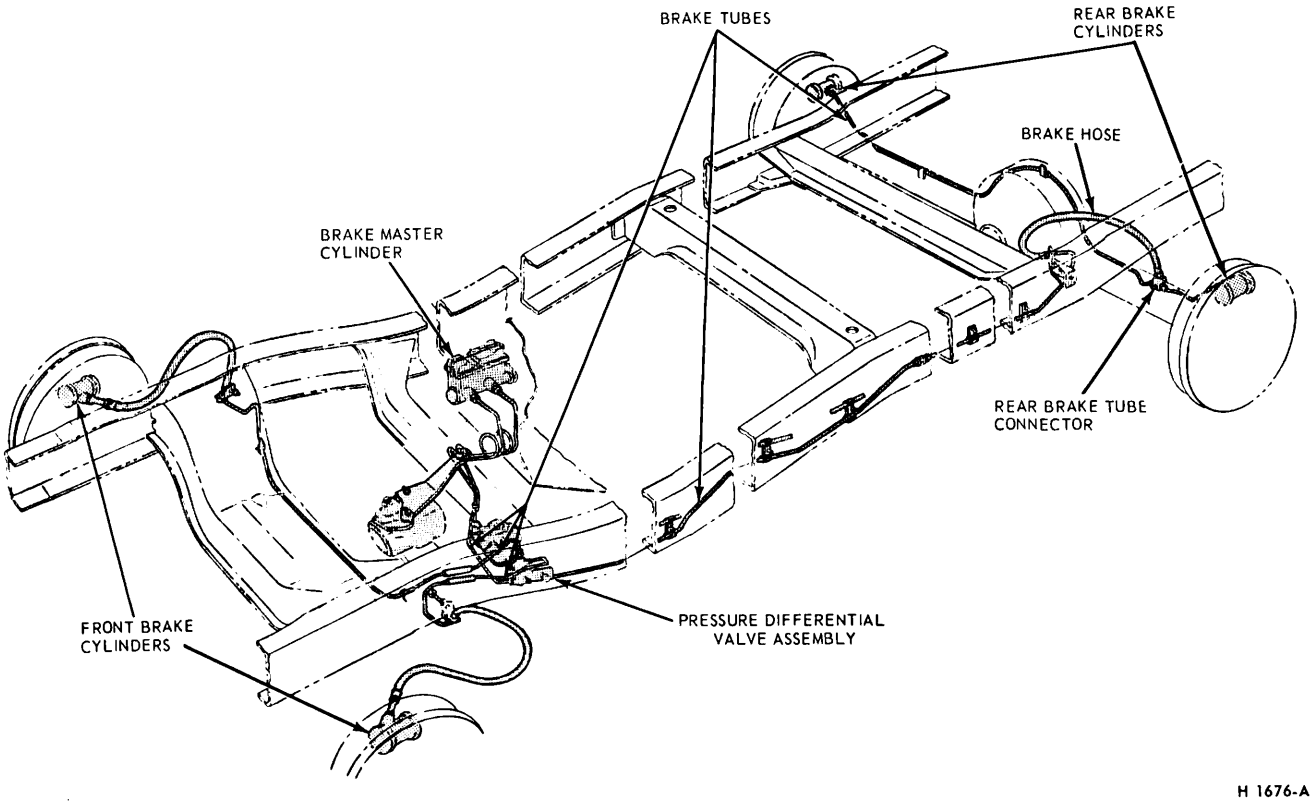

FIG. 2—Typical Hydraulic Brake System—Dual Brake Master Cylinder F-100-350

assembly (Figs. 5 and 6). The electrical brake warning switch, and the brake lines (tubes) leading from the differential valve assembly to the front and rear wheel brake cylinders are also shown in Figs. 5 and 6.

On all 100-400 Series trucks the dual master cylinder primary and secondary circuits actuate either the front or rear wheel brakes.

On 500-950 Series trucks with a split hydraulic system, each of the two lines from the dual-master cylinder actuates one brake cylinder at each wheel (front and rear) for vehicles with 15 by 3-inch front brakes. On vehicles with 14 by 2-1/2-inch front duo-servo brakes, the single brake cylinders in both front wheels are actuated by one line that also operates one cylinder at each rear wheel. The line from the other master cylinder outlet port actuates the remaining brake wheel cylinder at each rear wheel. Power boosters are dash-mounted or frame-mounted on F and N-500-600 Series models. Other 500-950 Series Models have frame-mounted boosters.

Truck Model	Non-Power	Power
F-100-250 (4 x 2 Drum)	AA	AK
F-350 (Drum)	AB	AL
F-100 (4 x 4)	AC	
F-250 (4 x 4)	AA	
P-350-400-3500-4000	AZ	AL
Bronco	AN	
E-100-200-300	AW	
C-Series with Split Hydraulic Brakes		HG
F and B-Series with Split Hydraulic Brakes and Frame Mounted Booster 15 x 3 Front Brake		TD
14 x 2-1/2 Front Brake		TB
N-Series with Split Hydraulic Brakes and Frame Mounted Booster 15 x 3 Front Brake		HJ
14 x 2-1/2 Front Brake		HL

FIG. 3—Dual Master Cylinder Identification Chart

SINGLE MASTER CYLINDER BRAKE SYSTEM—500-950 SERIES

The standard hydraulic brake system on 500-950 F, N, T, C and P-Series Models is equipped with a single master cylinder and internal drum brakes at all wheels. On all models except P-500 and P-5000, the drum brakes are self adjusting.

The standard hydraulic brake system on some trucks is assisted by a vacuum booster which may be installed as either standard or optional equipment.

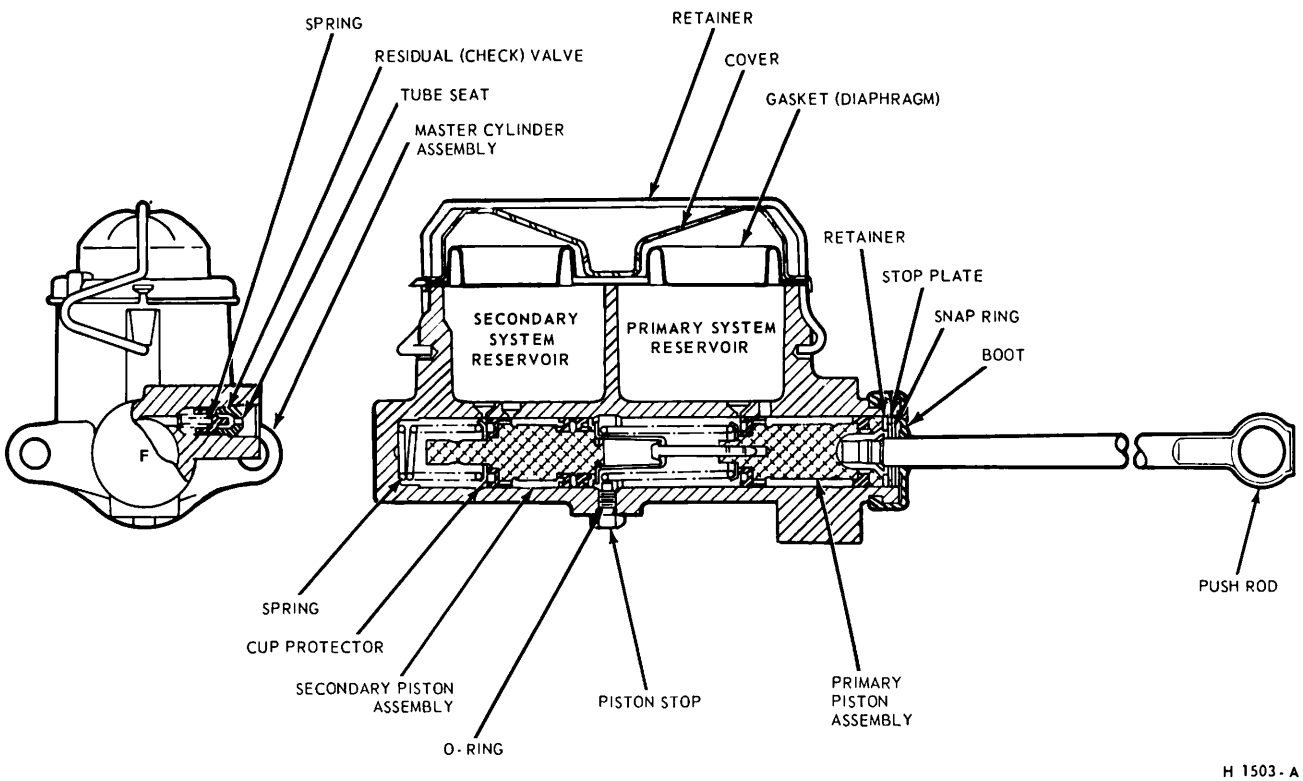

FIG. 4—Dual Master Cylinder—Typical

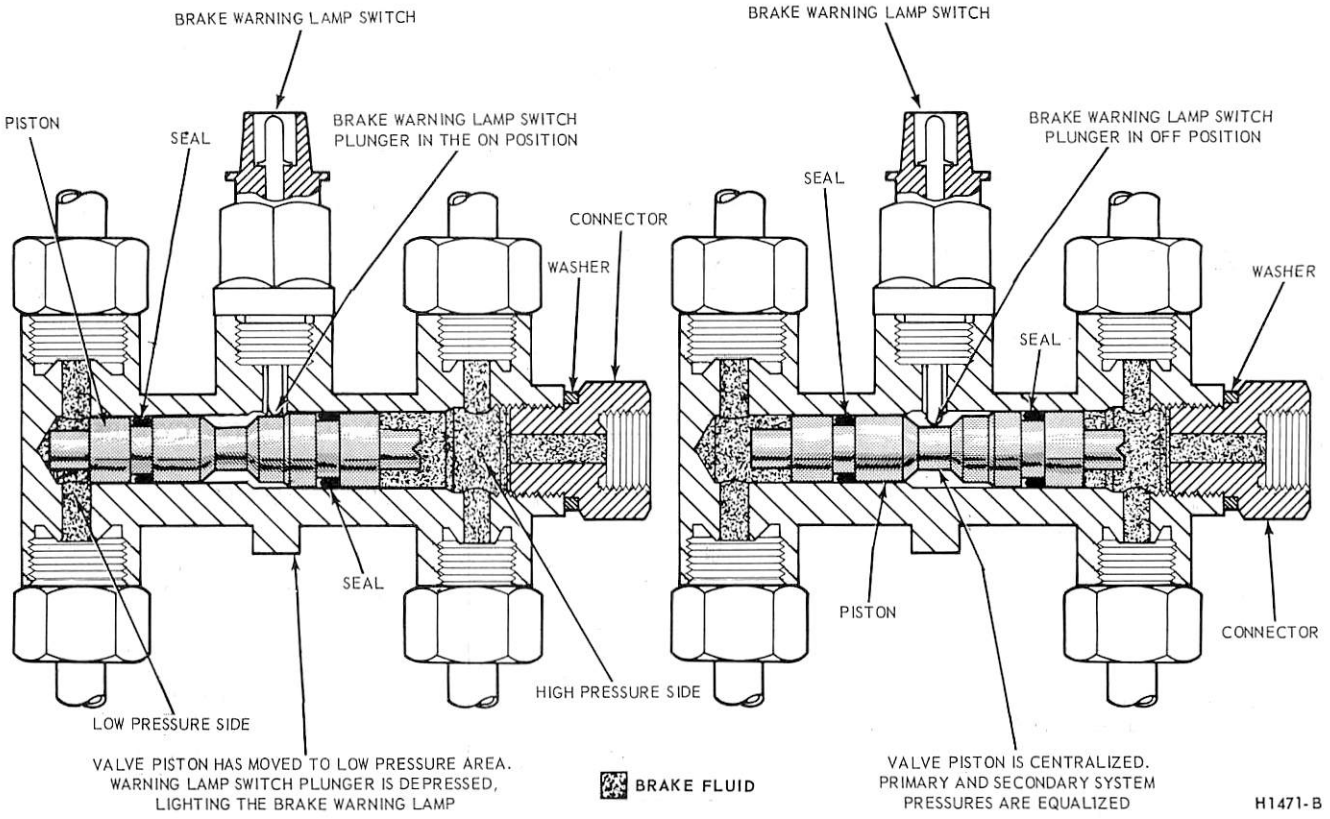

FIG. 5—Differential Valve System—100-400 Series

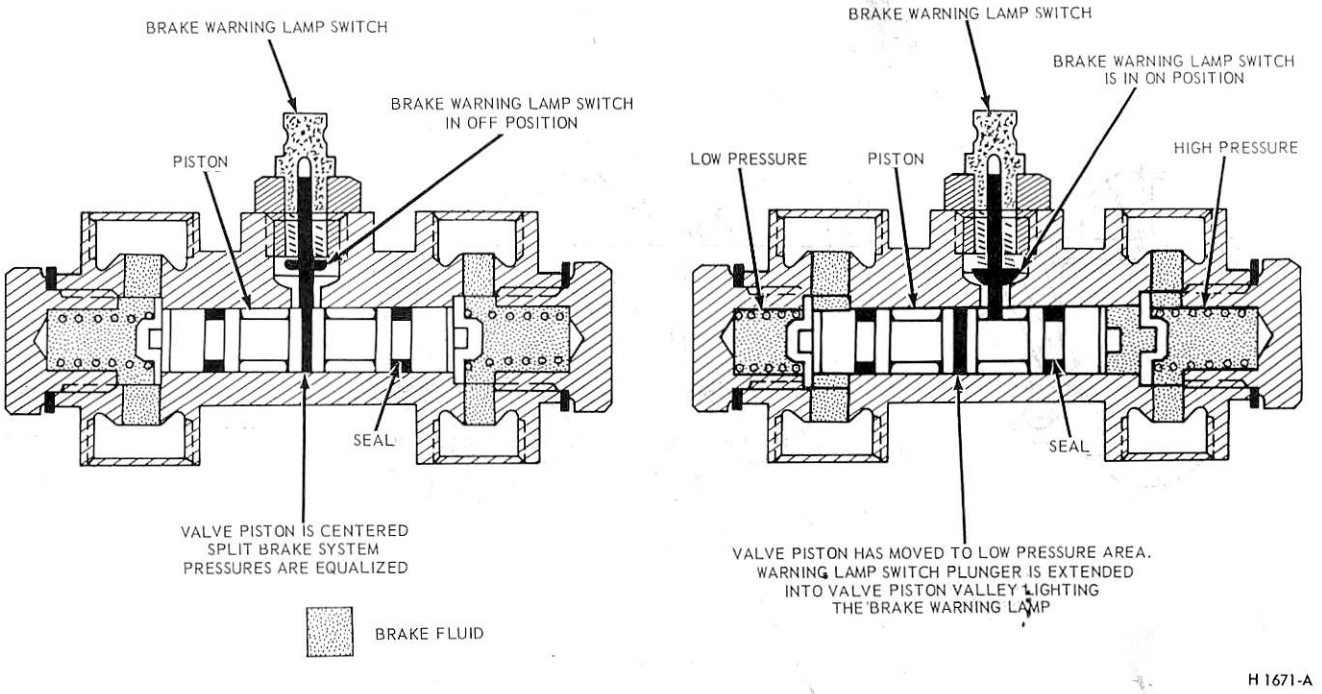

FIG. 6—Differential Valve System—500-950 Series With Split Hydraulic Brakes

DRUM BRAKES

All Ford truck models have internal expanding shoes, except the F-250 and F-350 which may have front disc brakes. The different types of brake assemblies vary in the way that the shoes are anchored, in the number of wheel cylinders used at each wheel, and in the number of pistons in the wheel cylinder.

In the single anchor type, both brake shoes are mounted to the same anchor and are actuated by one wheel cylinder. In the duo-servo, single anchor brake, the wheel cylinder has two pistons. One piston exerts force against the upper end of the primary shoe; the other piston exerts force against the upper end of the secondary shoe (Figs. 7 and 8).

In the double anchor type, each shoe is mounted to a separate anchor. The shoes are actuated by one duo-servo (two piston) cylinder at the upper end.

The front wheels of some trucks are equipped with two cylinders, each having one piston. The piston in one cylinder exerts force against one end of one shoe; the piston in the other cylinder exerts force against one end of one shoe; the piston in the other cylin-

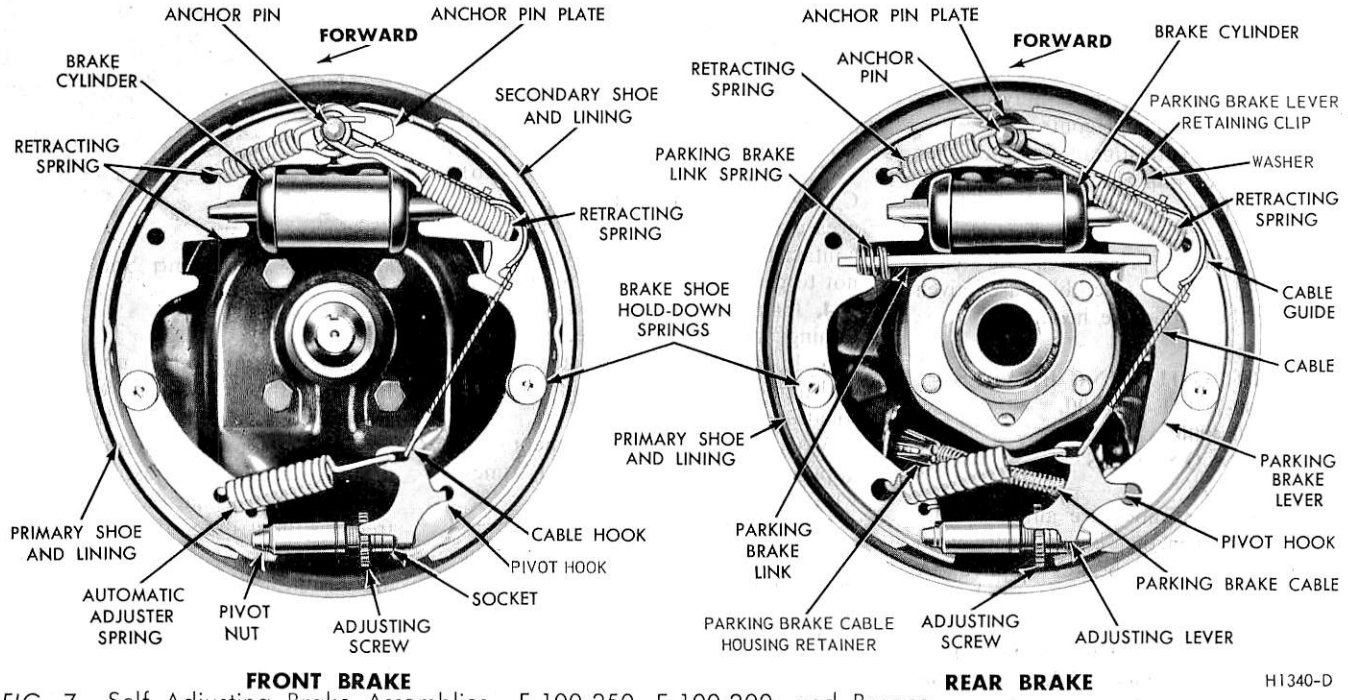

FIG. 7—Self Adjusting Brake Assemblies—F-100-250, E-100-200, and Bronco

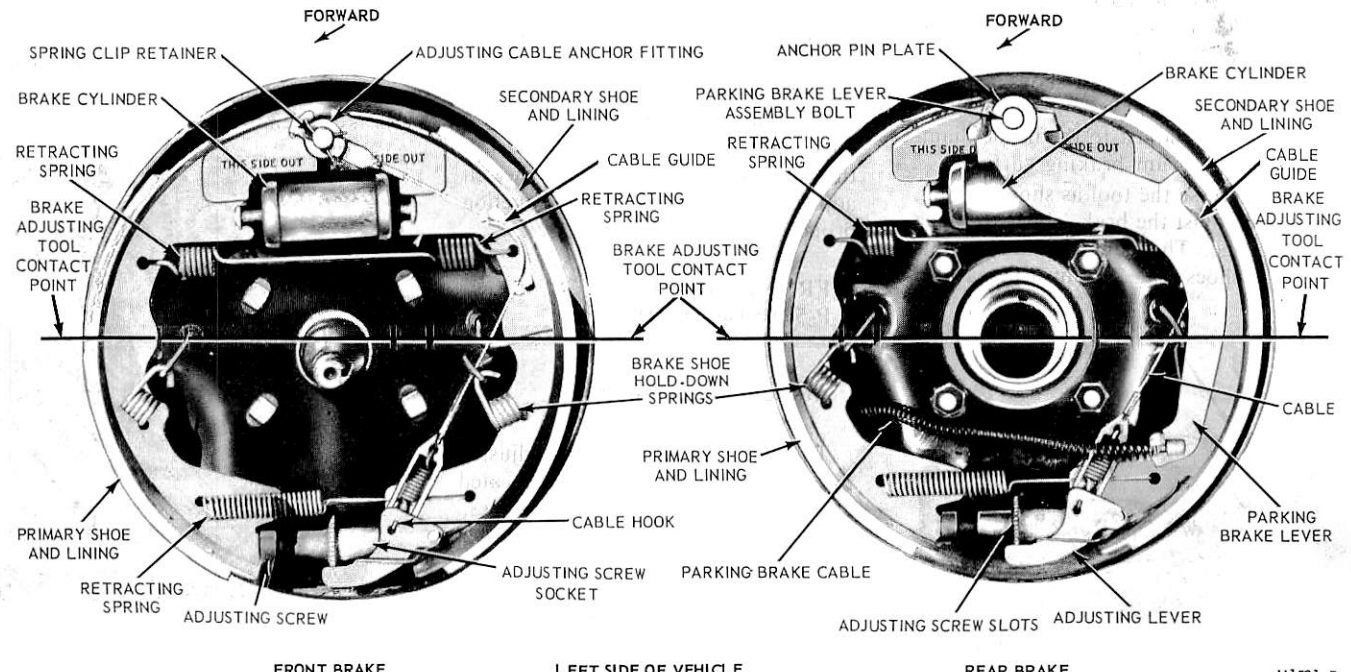

FIG. 8—Self Adjusting Brake Assemblies—F-250 (Heavy Duty)—350, E-300, and P-350-400-3500-4000

der exerts force against the opposite end of the other shoe.

The rear wheels of some vehicles are equipped with two cylinders, each having two pistons (four pistons total). Each of the four pistons exert force against one end of one shoe (Fig. 24).

2 IN-VEHICLE ADJUSTMENTS AND REPAIRS

BRAKE SHOE ADJUSTMENT

The brake drums should be at normal room temperature, when the brake shoes are adjusted. If the shoes are adjusted when the shoes are hot and expanded, the shoes may drag as the drums cool and contract.

A brake adjustment re-establishes the brake lining-to-drum clearance and compensates for normal lining wear.

Adjustment procedures for each type of brake assembly are given under the applicable heading.

SELF ADJUSTING BRAKES— F-100-350, E-100-300, P-350-4000 AND BRONCO SERIES

The brake shoes are automatically adjusted when the vehicle is driven in reverse and the brakes applied. A manual adjustment is required only after the brake shoes have been relined or replaced. **The manual adjustment is performed while the drums are removed, using the tool and the procedure detailed below.**

When adjusting the rear brake shoes, check the parking brake cables for proper adjustment. Make sure that the equalizer operates freely.

To adjust the brake shoes:

1. Use Rotunda Tool HRE 8650, (Fig. 9) and adjust to the inside diameter of the drum braking surface.

2. Reverse the tool as shown in Fig. 10 and adjust the brake shoes to touch the gauge. The gauge contact points on the shoes (Fig. 10) must be parallel to the vehicle with the center line through the center of the axle. Hold the automatic adjusting lever out of engagement while rotating the adjusting screw, to prevent burring the screw slots. Make sure the adjusting screw rotates freely. If necessary, lubricate the adjusting screw threads with a thin, uniform coating of C1AZ-19590-B Grease.

3. Apply a small quantity of C1AZ-19590-B high temperature grease to the points where the shoes contact the carrier plate, being careful not to get the lubricant on the linings.

4. Install the drums. Install the retaining nuts and tighten securely.

5. Install the wheels on the drums and tighten the mounting nuts to specification.

6. Complete the adjustment by applying the brakes several times while backing the vehicle.

7. After the brake shoes have been properly adjusted, check the operation of the brakes by making several stops while operating in a forward direction.

If a brake drum will not come off, insert a narrow screwdriver through the brake adjusting hole in the carrier plate, and disengage the adjusting lever from the adjusting screw. While thus holding the adjusting lever away from the adjusting screw, back off the adjusting screw with the brake adjusting tool (Figs. 16 and 17). Back off the adjustment only if the drum cannot be removed. Be very careful not to burr, chip, or damage the notches in the adjusting screw: otherwise, the self adjusting mechanism will not function properly.

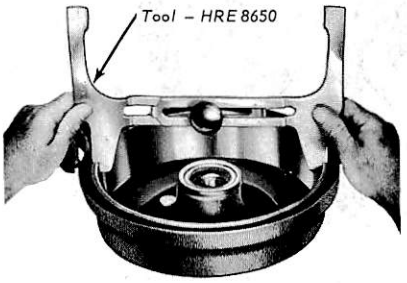

H 1411-B

FIG. 9—Measuring Drum

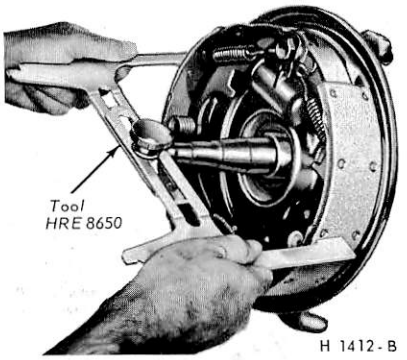

H 1412-B

FIG. 10—Measuring Shoes

FRONT BRAKE— P-500-5000 SERIES

Manual Adjustment

The single-anchor brake is adjusted by turning an adjusting screw located between the lower ends of the shoes.

1. Raise the vehicle until the wheels clear the floor.

2. Remove the cover from the adjusting hole at the bottom of the brake carrier plate, and turn the adjusting screw inside the hole to expand the brake shoes until they drag against the brake drum and lock up the drum. Back off the adjusting screw until a slight drag is noted (Fig. 11).

3. When the shoes are against the drum, back off the adjusting screw 10 to 12 notches so that the drum rotates freely without drag. If the drum does not rotate freely, remove the wheel and drum, and then blow out the dust and dirt from the linings. With sandpaper, remove all rust from the points where the shoes contact the carrier plate and apply a light coating of high temperature grease (C1AZ-19590-B). Be careful not to get the lubricant on the linings.

4. Install the wheel and drum, and adjust the shoes. Install the adjusting hole cover on the brake backing plate.

5. Check and adjust the other three brake assemblies.

H1006-B

FIG. 11—Single Anchor Brake Shoe Adjustment

6. Apply the brakes. If the pedal travels more than halfway down between the released position and the floor, too much clearance exists between the brake shoes and the drums. Repeat steps 2 and 3 above.

7. When all brake shoes have been properly adjusted, lower the vehicle. Road test the vehicle and check the operation of the brakes. Perform the road test only when the brakes will apply and the vehicle can be safely stopped.

REAR BRAKE—P-500-5000 SERIES

The two-cylinder brake assembly brake shoes are adjusted by turning adjusting wheels reached through slots in the backing plate.

The brake adjustment is made with the vehicle raised. Check the brake drag by rotating the drum in the direction of forward rotation as the adjustment is made.

1. Remove the adjusting slot covers from the backing plate (Fig. 12).

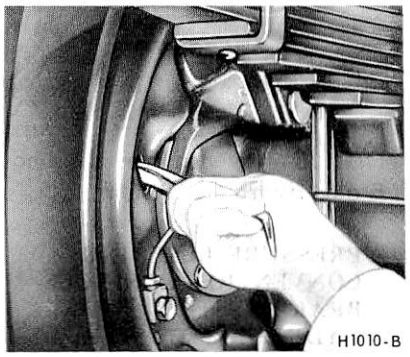

FIG. 12—Two-Cylinder Brake (Rear) Shoe Adjustment

2. Turn the rear (secondary shoe) adjusting screw inside the hole to expand the brake shoe until it drags against the brake drum.

3. Back off the adjusting screw so that the drum rotates freely without drag. Depress the brake pedal to center the brake shoes, and back off the adjusting screw an additional notch to provide operating clearance.

4. Repeat the above procedure on the front (primary) brake shoe.

5. Replace the adjusting hole covers.

SELF ADJUSTING BRAKES—REAR—500-950 SERIES (EXCEPT P-500)

The brake shoes are automatically adjusted when the vehicle is driven in reverse and the brakes applied. A manual adjustment is required only after the brake shoes have been relined or replaced.

The two-cylinder brake assembly (Figs. 24 and 25) brake shoes are adjusted by turning adjusting wheels reached through slots in the backing plate.

Two types of two-cylinder brake assemblies are used on truck rear wheels. The assemblies differ primarily in the retracting spring hookup, and in the design of the adjusting screws and locks. However, the service procedures are the same for both assemblies.

The brake adjustment is made with the vehicle raised. Check the brake drag by rotating the drum in the direction of forward rotation as the adjustment is made.

1. Remove the adjusting slot covers from the backing plate (Fig. 12).

2. Turn the rear (secondary shoe) adjusting screw inside the hole to expand the brake shoe until a slight drag is felt against the brake drum.

3. Repeat the above procedure on the front (primary) brake shoe.

4. Replace the adjusting hole covers.

5. Complete the adjustment by applying the brakes several times while backing the vehicle.

6. After the brake shoes have been properly adjusted, check the operation of the brakes by making several stops while operating in a forward direction.

If a brake drum will not come off, remove the adjusting slot covers and back off the adjuster screws to free the drum from the shoes.

SELF ADJUSTING BRAKES—TWO-CYLINDER—FRONT—600-950 SERIES

Two-Cylinder front brakes are adjusted by means of exposed, hex-head, self-locking cam adjusters. The brakes are to be manually adjusted initially. Subsequent adjustment is automatic. To adjust this brake:

1. Raise the vehicle and check the front brakes for drag by rotating the wheels.

2. Adjust one shoe by rotating the wheel backward and forward while turning the cam hex-head with a wrench. Bring the shoe out to the drum until a light drag is felt. **Do not apply excessive force on the hex head cam, as automatic adjuster parts can be damaged.** Back off the adjustment until the wheel turns freely. Adjust the other cam on the same wheel in the same manner.

3. Adjust the other front wheel brake using the procedure above.

4. Apply the brakes and recheck the adjustment.

SELF ADJUSTING BRAKES—ONE-CYLINDER—FRONT—500-800 SERIES (EXCEPT P-500)

The brake shoes are automatically adjusted when the vehicle is driven in reverse and the brakes applied. A manual adjustment is required only after the brake shoes have been relined or replaced.

1. With the vehicle raised, check the front brakes for drag by rotating the wheels.

2. Remove the cover from the adjusting hole at the bottom of the brake carrier plate, and turn the adjusting screw inside the hole to expand the brake shoes until a slight drag is felt at the wheel.

3. Complete the adjustment by applying the brakes several times while backing the vehicle.

4. After the brake shoes have been properly adjusted, check the operation of the brakes by making several stops while operating in a forward direction.

If a brake drum will not come off, insert a narrow screwdriver through the brake adjusting hole in the carrier plate, and disengage the adjusting lever from the adjusting screw. While thus holding the adjusting lever away from the adjusting screw, back off the adjusting screw with the brake adjusting tool (Fig. 16). Back off the adjustment only if the drum cannot be removed. Be very careful not to burr, chip, or damage the notches in the adjusting screw; otherwise, the self adjusting mechanism will not function properly.

HYDRAULIC SYSTEM BLEEDING

When any part of the hydraulic system has been disconnected for repair or replacement, air may get into the lines and cause spongy pedal action. This requires the bleeding of the hydraulic system after it has been properly connected to be sure all air is expelled from the brake cylinders and lines. The hydraulic system can be bled manually or with pressure bleeding equipment.

When bleeding the brake system, bleed one brake cylinder at a time, be-

ginning at the cylinder with the longest hydraulic line first. If the brake assembly is equipped with two cylinders, always bleed the upper cylinder first. Keep the master cylinder reservoir filled with the specified brake fluid during the bleeding operation. Never use brake fluid which has been drained from the hydraulic system.

The procedure for bleeding the single master cylinder on a C-Series truck is presented separately from the standard hydraulic system bleeding procedures.

If the hydraulic system is equipped with a vacuum booster, bleed the hydraulic section of the booster before bleeding the rest of the system. On vehicles equipped with a frame mounted booster and split hydraulic brake system, bleed the two booster slave cylinders first then again after bleeding all the wheel cylinders. **The bleeding operation must be done with the engine off and with no vacuum in the system.** If the brake pedal is still spongy after the first bleeding, repeat the bleeding procedure.

To bleed the hydraulic section of a vacuum booster, follow steps 1 through 4 of the manual bleeding procedure, attaching the drain tube to the bleeder screw at the end plate of the booster (or the bleeder screw nearest the power chamber). Repeat this procedure at the other bleeder screw if the booster is so equipped.

On dual-brake system hydraulic master cylinder equipped vehicles, it will be necessary to centralize the pressure differential valve after a brake hydraulic system malfunction has been corrected and the hydraulic system has been bled. Before any attempt is made to bleed the split hydraulic brake system on 500-950 Series trucks, remove the brake light warning switch from the pressure differential valve. Failure to remove the switch from the valve could result in possible damage to the switch assembly.

MANUAL BLEEDING—CONVENTIONAL, SINGLE-BRAKE SYSTEM HYDRAULIC MASTER CYLINDER

1. Attach a rubber drain tube to the bleeder screw of the brake wheel cylinder. The end of the tube should fit snugly around the bleeder screw.

2. Submerge the free end of the tube in a container partially filled with clean brake fluid. Loosen the bleeder screw.

3. Push the brake pedal down slowly by hand, allowing it to return slowly to the fully-released position. Repeat this operation until air bubbles cease to appear at the submerged end of the tube.

4. When the fluid is completely free of air bubbles, close the bleeder screw and remove the drain tube.

5. Repeat this procedure at each brake cylinder. Refill the master cylinder reservoir after each brake cylinder is bled and when the bleeding operation is completed.

MANUAL BLEEDING—DUAL-BRAKE SYSTEM HYDRAULIC MASTER CYLINDER

The primary and secondary hydraulic brake systems are individual systems and are bled separately. Bleed the longest line first on the individual system being serviced. **During the complete bleeding operation. DO NOT allow the reservoir to run dry.** Keep the master cylinder reservoirs filled with the specified brake fluid. **Never use brake fluid that has been drained from the hydraulic system.**

1. Remove the brake light warning light switch from the pressure differential valve (Fig. 6) on 500-950 Series trucks.

2. **Bleed the master cylinder at the outlet port side of the system being serviced.**

On a master cylinder without bleed screws, loosen the master cylinder to hydraulic line nut. Operate the brake pedal slowly until the brake fluid at the outlet connection is free of bubbles, then tighten the tube nut to the specified torque. **Do not use the secondary piston stop screw located on the bottom of the master cylinder to bleed the brake system. Loosening or removing this screw could result in damage to the secondary piston or stop screw.** Operate the brake pedal slowly until the brake fluid at the outlet connection is free of air bubbles, then tighten the bleed screw.

3. **Position a suitable 3/8 inch box wrench (Fig. 13) on the bleeder fitting on the brake wheel cylinder. Attach a rubber drain tube to the bleeder fitting. The end of the tube should fit snugly around the bleeder fitting.**

4. Submerge the free end of the tube in a container partially filled with clean brake fluid, and loosen the bleeder fitting approximately 3/4 turn.

5. Push the brake pedal down slowly thru its full travel. Close the bleeder fitting, then return the pedal to the fully-released position. Repeat this operation until air bubbles cease to appear at the submerged end of the bleeder tube.

6. When the fluid is completely free of air bubbles, close the bleeder fitting and remove the bleeder tube.

7. Repeat this procedure at the brake wheel cylinder on the opposite side. Refill the master cylinder reservoir after each wheel cylinder is bled.

When the bleeding operation is complete, the master cylinder fluid level should be filled to within 1/4 inch from the top of the reservoirs.

8. Centralize the pressure differential valve. Refer to the Centralizing of the Pressure Differential Valve procedures in this section.

9. Install the brake warning light switch on the pressure differential valve on 500-950 Series trucks.

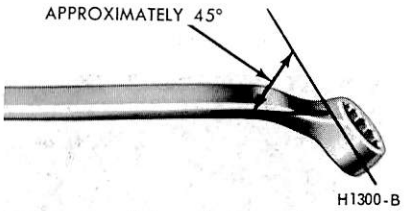

FIG. 13—Wrench For Bleeding Brake Hydraulic System

PRESSURE BLEEDING—CONVENTIONAL SINGLE-BRAKE SYSTEM HYDRAULIC MASTER CYLINDER

Be sure that the tank is clean and there is enough of the specified brake fluid in the bleeder tank to complete the bleeding operation and that the tank is charged with 10-30 pounds of air pressure. Never exceed 50 pounds pressure.

On a C-Series truck with a single master cylinder, the master cylinder can only be bled manually. Therefore, bleed the entire hydraulic system first before bleeding the master cylinder.

1. On a F-, N-, or T-Series truck, clean all dirt from around the filler hole on the top of the master cylinder reservoir, and attach the bleeder tank hose to the filler hole.

On a C-Series truck with a single master cylinder, disconnect the line from the bottom of the master cylinder and connect the line to the pressure bleeder tank hose. Install a 5/16 inch Weatherhead plug into the bottom of the master cylinder.

2. Attach a rubber drain tube to the bleeder screw of the brake cylinder. The end of the tube should fit snugly around the bleed screw.

3. Submerge the free end of the tube in a container partially filled with clean brake fluid and then loosen the bleeder screw.

4. Open the valve on the bleeder tank to admit pressurized brake fluid to the master cylinder reservoir (or line).

5. When air bubbles cease to appear in the fluid at the submerged end of the drain tube, close the bleeder screw and remove the tube.

6. Repeat this procedure at each brake cylinder.

7. When the bleeding operation is completed, close the bleeder tank valve and remove the tank hose from the filler hole.

On a C-Series truck with a single master cylinder, remove the line from the tank hose and connect it to the master cylinder.

8. On all vehicles, refill the master cylinder reservoir to within 1/4 inch from the top of the filler neck.

C-SERIES TRUCK SINGLE MASTER CYLINDER BLEEDING

1. Loosen the fittings at the bottom of the master cylinder, approximately one turn.

2. Wrap a shop cloth, or a piece of clean waste material, around the tubing below the fitting to absorb expended brake fluid.

3. Push the brake pedal down slowly by hand to the floor of the cab. This will force air which may be trapped in the master cylinder to escape at the fitting.

4. Hold the pedal down and tighten the fitting. Release the brake pedal. **Do not release the brake pedal until the fitting is tightened as additional air will be introduced into the master cylinder.**

5. Repeat this procedure until air ceases to escape at the fitting and a firm pedal is obtained.

PRESSURE BLEEDING—DUAL BRAKE SYSTEM HYDRAULIC MASTER CYLINDER

Bleed the longest lines first. The bleeder tank should contain enough of the specified brake fluid to complete the bleeding operation. The tank should be charged with approximately 10 to 30 pounds of air pressure. Never exceed 50 pounds pressure. **Never use brake fluid that has been drained from the hydraulic system.**

1. Remove the brake warning light switch from the pressure differential valve on 500-950 Series trucks (Fig. 6).

2. Clean all dirt from the master cylinder reservoir cover.

3. Remove the master cylinder reservoir cover and rubber gasket, and fill the master cylinder reservoir with the specified brake fluid. Install the pressure bleeder adapter tool to the master cylinder, and attach the bleeder tank hose to the fitting on the adapter.

Master cylinder pressure bleeder adapter tools can be obtained from the various manufacturers of pressure bleeding equipment. Follow the instructions of the manufacturer when installing the adapter.

4. Position a 3/8 inch box wrench (Fig. 13) on the bleeder fitting on the right rear brake wheel cylinder. Attach a bleeder tube to the bleeder fitting. **The end of the tube should fit snugly around the bleeder fitting.**

5. Open the valve on the bleeder tank to admit pressurized brake fluid to the master cylinder reservoir.

6. Submerge the free end of the tube in a container partially filled with clean brake fluid, and loosen the bleeder fitting.

7. When air bubbles cease to appear in the fluid at the submerged end of the bleeder tube, close the bleeder fitting and remove the tube.

8. Repeat steps 3 through 6 at the opposite wheel cylinder of the system being bled.

9. When the bleeding operation is completed, close the bleeder tank valve and remove the tank hose from the adapter fitting.

10. Remove the Pressure Bleeder Adapter Tool. Fill the master cylinder reservoirs to within 1/4 inch from the top. Install the master cylinder cover and gasket.

11. Centralize the pressure differential valve.

12. Install the brake warning light switch on the pressure differential valve on 500-950 Series trucks.

CENTRALIZING THE PRESSURE DIFFERENTIAL VALVE

F-100-350,E-100-300, P-350-400-3500-4000, AND BRONCO

1. Turn the ignition switch to the ACC or ON position. Loosen the pressure differential valve inlet tube nut of the system that remained operative, or the side opposite the system that was bled last. Operate the brake pedal carefully and gradually until the pressure differential valve is returned to a centralized position and the brake warning light goes out. Tighten the tube nut.

2. Check the fluid level in the master cylinder reservoirs and fill them to within 1/4 inch of the top with the specified brake fluid.

3. Turn the ignition switch to the OFF position.

500-950 SERIES TRUCKS WITH SPLIT HYDRAULIC BRAKES

The pressure differential valve used with the split hydraulic brake system has a self-centering spring. Use the following procedure to reset the valve:

1. Remove the switch connector wire.

2. Remove the threaded hex-shaped electrical switch body from the center of the valve. This allows the valve centering springs to re-position the valve.

3. Install the electrical switch and connect the wire.

4. Apply the brakes a few times and check the operation of the warning light. The light should go on with the ignition switch in the START position only.

HYDRAULIC LINE REPAIR

Steel tubing is used in the hydraulic lines between the master cylinder and the front brake tube connector (Fig. 14), and between the rear brake tube connector (Fig. 15) and the rear brake cylinders. Flexible hoses connect the brake tube to the front brake cylinders and to the rear brake tube connector.

When replacing hydraulic brake tubing, hoses, or connectors, tighten all connections securely. After replacement, bleed the brake system at the wheel cylinders and at the booster, if so equipped.

BRAKE TUBE

If a section of the brake tube becomes damaged, the entire section should be replaced with tubing of the same type, size, shape, and length. **Copper tubing should not be used in the hydraulic system.** When bending brake tubing to fit the frame or rear-

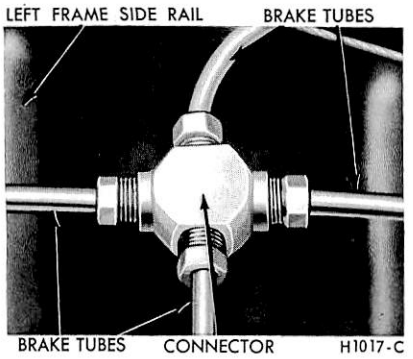

FIG. 14—Front Brake Tube Connector—Typical

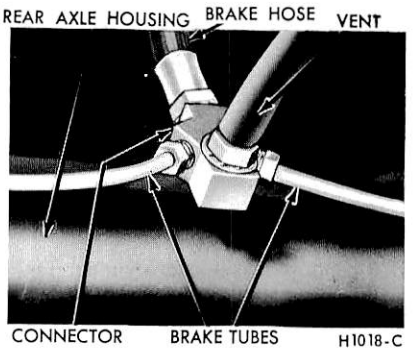

FIG. 15—Rear Brake Tube Connector

axle contours, be careful not to kink or crack the tube.

All brake tubing should be double flared to provide good leak-proof connections. Always clean the inside of a new brake tube with clean isopropyl alcohol.

BRAKE HOSE

A flexible brake hose should be replaced if it shows signs of softening, cracking, or other damage.

When installing a new brake hose, position the hose to avoid contact with other truck parts.

3 REMOVAL AND INSTALLATION

BRAKE DRUMS

FRONT BRAKE DRUM— F-100-350 (4 x 2), E-100-300, AND P-350-4000 SERIES

Removal

1. Raise the vehicle so that the wheel is clear of the floor.
2. Remove the wheel cover or hub cap, wheel, and bearing dust cap. Remove the cotter pin, nut lock, nut, and washer.
3. Pull the brake drum approximately two inches forward and push back into position. Remove the wheel bearing and withdraw the brake drum.

If the brake drum will not come off, insert a narrow screwdriver through the brake adjusting hole in the carrier plate, and disengage the adjusting lever from the adjusting screw. While thus holding the adjusting lever away from the adjusting screw, back off the adjusting screw with the brake adjusting tool (Figs. 16 and 17). **Back off the adjustment only if the drum cannot be removed. Be very careful not to burr, chip, or damage the notches in the adjusting screw; otherwise, the self adjusting mechanism will not function properly.**

If the adjusting screw was backed off, check to make sure that the adjusting lever is still properly seated in the shoe web.

Installation

1. If the hub and drum assembly is being replaced, remove the protective coating from the new drum with carburetor degreaser. Install new bearings and grease retainer. Soak a new leather grease retainer in light engine oil at least 30 minutes before installation. If the grease retainer is synthetic, it should be dipped in light engine oil. Pack the wheel bearings, install the inner bearing cone and roller assembly in the inner cup, and install the new grease retainer.

If the original drum is being installed, make sure that the grease in the hub is clean and adequate.

2. Install the drum assembly, outer wheel bearing, washer and adjusting nut.
3. Adjust the wheel bearing, install the nut lock and cotter pin, then install the grease cap.
4. Install the wheel and hub cap. If the adjustment was backed off, adjust the brake as outlined under Brake Shoe Adjustment, Part 2-2, Section 2.

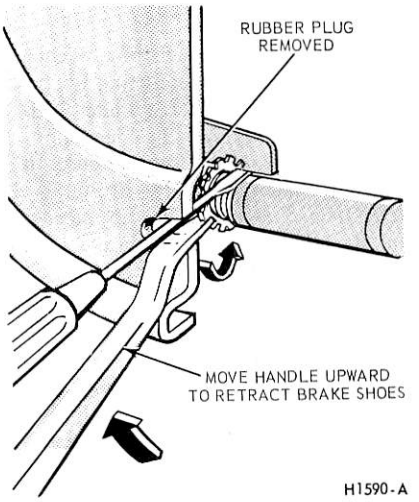

FIG. 16—Backing Off Brake Adjustment—F-100-250, E-100-200, and Bronco

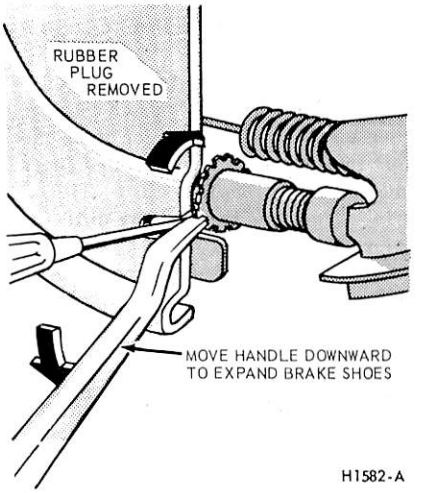

FIG. 17—Backing Off Brake Adjustment—F-250-350, E-300 and P-350-400-3500-4000

REAR BRAKE DRUM F-100, E-100-200 AND BRONCO

Removal

1. Raise the vehicle so that the wheel is clear of the floor.
2. Remove the hub cap and wheel and tire assembly. Remove the three retaining nuts and remove the brake drum.

If the brake drum will not come off, insert a narrow screwdriver through the brake adjusting hole in the backing plate, and disengage the adjusting lever from the adjusting screw. While thus holding the adjusting lever away from the adjusting screw, back off the adjusting screw

with the brake adjusting tool (Figs. 16 and 17). **Back off the adjustment only if the drum cannot be removed. Be very careful not to burr, chip, or damage the notches in the adjusting screw; otherwise, the self adjusting mechanism will not function properly.**

If the adjusting screw was backed off, check to make sure that the adjusting lever is still properly seated in the shoe web.

Installation

1. Remove the protective coating from a new drum with carburetor degreaser.
2. Adjust the brakes as outlined under Brake Shoe Adjustments, Part 2-2, Section 2.
3. Install the drum.
4. Install the three retaining nuts and tighten securely. Install the wheel on the axle shaft flange studs against the drum, and tighten the retaining nuts to specifications.

REAR BRAKE DRUM— F-250 (HEAVY DUTY) 350, E-300, P-350-4000 SERIES

Removal

1. Raise the truck and install stands.
2. Remove the wheel and tire as an assembly. Then back off the rear brake shoe adjustment.
3. Remove the rear axle shaft retaining nuts, adapters, axle shaft, and grease seal.
4. Remove the wheel bearing locknut, lock washer, and adjusting nut.
5. Remove the hub and drum from the axle.
6. Remove the brake drum to hub retaining screws, bolts, or bolts and nuts. Then remove the brake drum from the hub.

Installation

1. Check the drum for damage or wear, and repair or replace as necessary. If a new drum is to be installed, be sure to remove the protective coating with a suitable degreaser.

New grease retainer seals should be installed whenever a wheel and hub is removed.

2. Position the brake drum to the hub and install the attaching screws, bolts, or bolts and nuts.
3. Position the hub and drum as an assembly on the axle and start the adjusting nut.
4. Adjust the wheel bearing nut and then install the wheel bearing lock washer and locknut.
5. Install a new rear axle oil seal, axle shaft and gasket, stud adapters, and attaching nuts.
6. Install the wheel and tire as an assembly.
7. Adjust the brake shoes and then remove the stand and lower the truck.

FRONT BRAKE DRUM— F-100-250 (4 x 4) AND BRONCO SERIES

Removal

1. Raise the vehicle and install stands.
2. Back off the brake shoe adjustment. Remove the hub dust cap.

Remove the hub retaining snap ring, and slide the splined driving hub from between the axle shaft and the wheel hub. Remove the driving hub spacer or spring.

3. With tool T59T-1197-B, remove the lock nut, the nut lock, and the wheel bearing adjusting nut from the steering spindle. Remove the wheel, hub and drum as an assembly. The wheel outer bearing will be forced off the spindle at the same time. Remove the wheel inner bearing cone.

If the vehicle is equipped with a locking type hub refer to Part 4-4.

4. Remove the front wheel to hub retaining nuts. Remove the wheel and tire from the hub and drum.
5. Remove the brake drum retaining bolts and nuts.
6. Remove the brake drum from the hub.

Installation

1. Place the brake drum to the hub and install the retaining bolts and nuts.
2. Install the wheel and tire to the hub and start the retaining nuts.
3. Install the wheel hub and drum assembly on the spindle. Install the driving hub spacer and then the wheel outer bearing cone and the adjusting nut with the dowel outboard.
4. Rotate the wheel in both directions and at the same time tighten the inner locknut to 50 ft-lbs with tool T59T-1197-A, to bring the bearing rollers into proper contact. After the bearings are firmly seated, back off the inner locknut and retighten to 30 to 40 ft-lbs while hub is rotated.
5. Back off the inner locknut 135 degrees to 150 degrees. Assemble the lockwasher by turning the nut to the nearest hole in the washer lock. Install the outer lock nut and torque to 50 ft-lbs minimum.
6. Slide the driving hub on the axle shaft and install the snap ring.

If the vehicle is equipped with a locking type hub, refer to Part 4-4.

7. Adjust the brake, and then torque the wheel nuts.
8. Install the dust cap.
9. Remove the stands and lower the truck.

BRAKE DRUMS 500 THROUGH 1000 SERIES

Since the brake drum service procedures for these models apply to both hydraulic and air brakes, they are covered under Common Adjustment and Repairs in Part 2-1.

BRAKE SHOE AND ADJUSTING SCREW

F-100-250, E-100-200 AND BRONCO SERIES

Removal

1. With the wheel and drum removed, install a clamp over the ends of the brake cylinder as shown in Fig. 18.
2. Contract the shoes as follows:

a. Disengage the adjusting lever from the adjusting screw by pulling backward on the adjusting lever (Fig. 7).

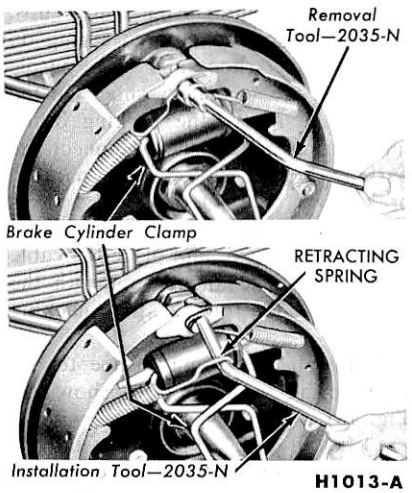

FIG. 18—Spring Replacement

b. Move the outboard side of the adjusting screw upward and back off the pivot nut as far as it will go.

3. Pull the adjusting lever, cable and automatic adjuster spring down and toward the rear to unhook the pivot hook from the large hole in the secondary shoe web. **Do not attempt to pry the pivot hook out of the hole.**

4. Remove the automatic adjuster spring and adjusting lever.

5. Remove the secondary shoe to anchor spring with the tool shown in Fig. 18. With the same tool, remove the primary shoe to anchor spring and unhook the cable anchor. Remove the anchor pin plate, when so equipped.

6. Remove the cable guide from the secondary shoe (Fig. 7).

7. Remove the shoe hold-down springs, shoes, adjusting screw, pivot nut, and socket. Note the color of each hold-down spring for assembly.

8. On rear brakes, remove the parking brake link and spring. Disconnect the parking brake cable from the parking brake lever.

9. After removing the rear brake secondary shoe, disassemble the parking brake lever from the shoe by removing the retaining clip and spring washer (Fig. 7).

Installation

1. Before installing the rear brake shoes, assemble the parking brake lever to the secondary shoe and secure with the spring washer and retaining clip.

2. Apply a light coating of high-temperature grease (C1AZ-19590-B) at the points where the brake shoes contact the backing plate.

3. Position the brake shoes on the backing plate, and install the hold-down spring pins, springs, and cups. Use the aluminum colored spring on the primary shoe and the purple spring on the secondary shoe. On the rear brake install the parking brake link, spring and washer. Connect the parking brake cable to the parking brake lever (Fig. 7).

4. Install the anchor pin plate, when so equipped, and place the cable anchor over the anchor pin with the crimped side toward the backing plate.

5. Install the primary shoe to anchor spring with the tool shown in Fig. 18).

6. Install the cable guide on the secondary shoe web with the flanged holes fitted into the hole in the secondary shoe web. Thread the cable around the cable guide groove (Fig. 7).

It is imperative that the cable be positioned in this groove and not between the guide and the shoe web.

7. Install the secondary shoe to anchor (long) spring (Fig. 18).

Be certain that the cable end is not cocked or binding on the anchor pin when installed. All parts should be flat on the anchor pin. Remove the brake cylinder clamp.

8. Apply high-temperature grease (C1AZ-19590-B) to the threads and the socket end of the adjusting screw. Turn the adjusting screw into the adjusting pivot nut to the limit of the threads and then back off 1/2 turn.

Interchanging the brake shoe adjusting screw assemblies from one side of the truck to the other would cause the brake shoes to retract rather than expand each time the automatic adjusting mechanism operated. To prevent installation on the wrong side of the vehicle, the socket end of the adjusting screw is stamped with an R or L (Fig. 19). The adjusting pivot nuts can be distinguished by the number of lines machined around the body of the nut. Two lines indicate right hand nut; one line indicates a left hand nut.

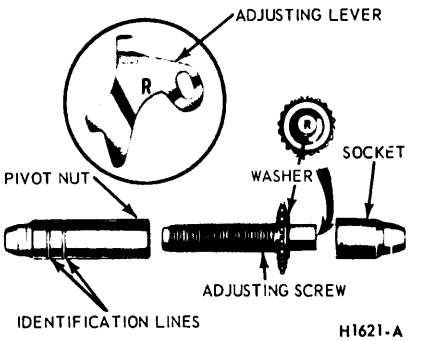

FIG. 19—Adjusting Screw and Lever Identification—F-100-250, E-100-200 and Bronco

9. Place the adjusting socket on the screw and install this assembly between the shoe ends with the adjusting screw nearest the secondary shoe.

10. Hook the cable hook into the hole in the adjusting lever from the backing plate side. The adjusting levers are stamped with an R or L to indicate their installation on a right or left hand brake assembly (Fig. 19).

11. Position the hooked end of the adjuster spring in the large hole in the primary shoe web, and connect the loop end of the spring to the adjuster lever hole.

12. Pull the adjuster lever, cable and automatic adjuster spring down and toward the rear to engage the pivot hook in the large hole in the secondary shoe web (Fig. 7).

13. After installation, check the action of the adjuster by pulling the section of the cable between the cable guide and the adjusting lever toward the secondary shoe web far enough to lift the lever past a tooth on the adjusting screw wheel. The lever should snap into position behind the next tooth, and release of the cable should cause the adjuster spring to return the lever to its original position. This return action of the lever will turn the adjusting screw one tooth.

If pulling the cable does not produce the action described, or if the lever action is sluggish instead of positive and sharp, check the position of the lever on the adjusting screw toothed wheel. With the brake in a vertical position (anchor at the top), the lever should contact the adjusting wheel one tooth above the center line of the adjusting screw. If the contact point is below this center line, the lever will not lock on the teeth in the adjusting screw wheel, and the screw will not be turned as the lever is actuated by the cable.

To determine the cause of this condition:

a. Check the cable end fittings. The cable should completely fill or extend slightly beyond the crimped section of the fittings. If it does not meet this specification, possible damage is indicated and the cable assembly should be replaced.

b. Check the cable guide for damage. The cable groove should be parallel to the shoe web, and the body of the guide should lie flat against the web. Replace the guide if it shows damage.

c. Check the pivot hook on the lever. The hook surfaces should be square with the body on the lever for proper pivoting. Repair the hook or replace the lever if the hook shows damage.

d. See that the adjusting screw socket is properly seated in the notch in the shoe web.

F-250 (HEAVY DUTY) 350, E-300, P-350-4000 SERIES-WEB LEDGE

Removal

1. Remove the wheel and drum. If the drum does not clear the brake shoes, retract the brake shoes as

shown in Fig. 17.

2. On a front wheel, remove the spring-clip retainer fastening the adjusting cable anchor fitting to the brake anchor pin (Fig. 8).

On a rear wheel, remove the parking brake lever assembly retaining nut from behind the backing plate and remove the parking brake lever assembly (Fig. 22).

From this point on the disassembly of the front and rear brake assemblies are the same.

3. Remove the adjusting cable from the anchor pin, cable guide and adjusting lever.

4. Remove the brake shoe retracting springs.

5. Remove the brake shoe hold-down spring from each shoe.

6. Remove the brake shoes and adjusting screw assembly.

7. Disassemble the adjusting screw assembly.

Installation

1. Clean the ledge pads (6) on the backing plate. Sand lightly to bare metal.

2. Apply a light coat of C1AZ-19590-B high temperature grease on the ledge pads of the backing plate. Also apply C1AZ-19590-B high temperature grease to the retracting and hold-down spring contacts on the brake shoes and backing plate.

3. Apply C1AZ-19590-B high temperature grease on the threads and socket end of the adjusting screw.

4. Install the upper retracting spring on the primary and secondary shoes and position the assembly on the backing plate with the wheel cylinder push rods positioned in the shoe slots.

5. Install the brake shoe hold-down springs (Fig. 22).

6. Install the brake shoe adjusting screw assembly (the slot in the head of the adjusting screw toward the primary shoe), lower retracting spring, adjusting lever assembly and connect the adjusting cable to the adjusting lever. Position the cable in the cable guide and install the cable anchor fitting on the anchor pin.

7. On a rear wheel, install the parking brake assembly in the anchor pin and secure with the retaining nut behind the backing plate.

8. Adjust the brakes before installing the drums, using Rotunda Tool HRE-8650, as outlined in Part 2-2, Section 2.

P-500-5000 SERIES—FRONT

Removal

Refer to Figure 20.

1. Raise the truck until the wheels clear the floor. Then remove the wheel and drum. **Do not push down the brake pedal after the brake drum has been removed.**

On a vehicle equipped with a vacuum or air booster, be sure the engine is stopped and there is no vacuum or air pressure in the system before disconnecting the hydraulic lines.

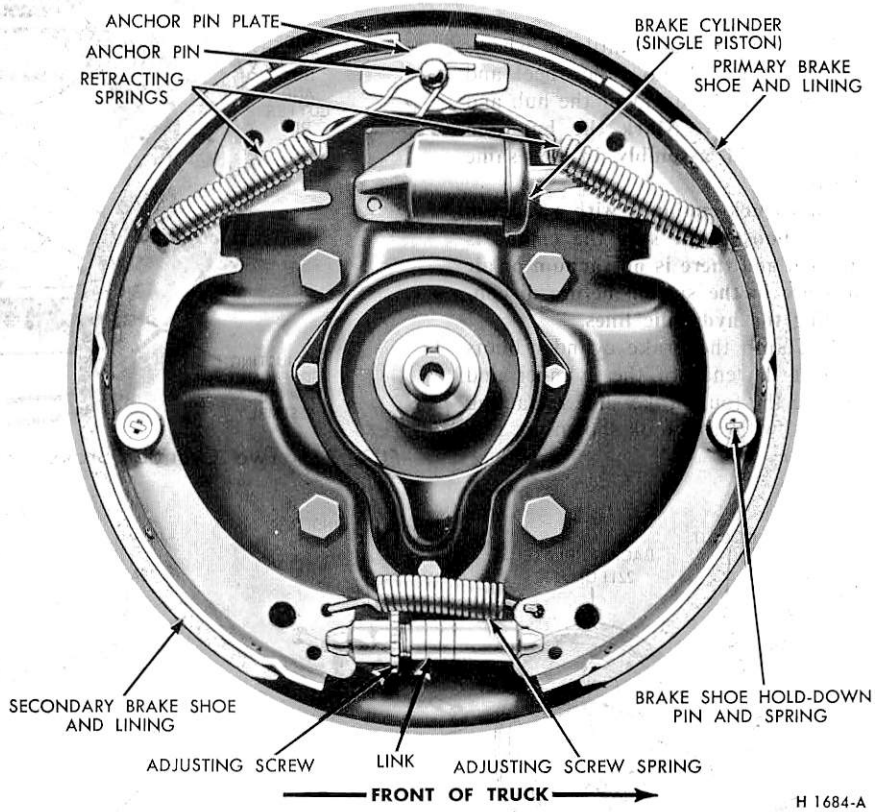

FIG. 20—Single Anchor Brake Shoe—Front—P-500-5000 Series

2. Clamp the brake cylinder boots against the ends of the cylinder, and remove the brake shoe retracting springs from both shoes (Fig. 18).

3. Remove the anchor pin plate (Fig. 20).

4. Remove the hold-down spring cups and springs from the shoes, and remove the shoes and the adjusting screw parts from the carrier plate. **Do not let oil or grease touch the brake linings.** If the shoes on a rear brake assembly are being removed, remove the parking brake lever, link, and spring with the shoes. Unhook the parking brake cable from the lever as the shoes are being removed.

5. Remove the hold-down spring pins from the carrier plate.

6. Remove the adjusting screw parts from the brake shoes. If the shoes are from a rear brake assembly, remove the parking brake lever from the secondary shoe.

Installation

1. Coat all points of contact between the brake shoes and the other brake assembly parts with Lubriplate or similar lubricant. Lubricate the adjusting screw threads.

2. Place the adjusting screw, socket, and nut on the brake shoes so that the star wheel on the screw is opposite the adjusting hole in the carrier plate. Then install the adjusting screw spring.

3. Position the brake shoes and the adjusting screw parts on the carrier plate, and install the hold-down spring pins, springs, and cups. When assembling a rear brake, connect the parking brake lever to the secondary shoe, and install the link and spring with the shoes. Be sure to hook the parking brake cable to the lever.

4. Install the anchor pin plate on the pin.

5. Install the brake shoe retracting springs on both shoes (Fig. 18), being

careful not to bend the hooks or to stretch the springs beyond the attaching points. **The primary shoe spring must be installed first.**

6. Remove the clamp from the brake cylinder boots.

7. Install the wheel and drum.

8. Bleed the system and adjust the brakes. Check the brake pedal operation after bleeding the system. Then lower the truck.

P-500-5000 SERIES—REAR

Removal

Refer to Figure 21.

1. Raise the truck until the wheels clear the floor. Remove the wheel, and then remove the drum or the hub and drum assembly. **Mark the hub and drum to aid assembly in the same position.**

On a truck equipped with a vacuum or air booster, be sure the engine is stopped and there is no vacuum or air pressure in the system before disconnecting the hydraulic lines.

2. Clamp the brake cylinder boots against the ends of the cylinder and remove the four brake shoe retracting springs with the tool shown in Fig. 18.

3. Remove the brake shoe guide bolt cotter pin, nut, washer, and bolt from both shoes and remove the shoes from the carrier plate.

4. Remove the clamp-type adjusting wheel lock from the anchor pin support, and unthread the adjusting screw and wheel assembly from the anchor pin support.

Installation

1. Coat all points of contact between the brake shoes and other brake assembly parts with high temperature grease.

2. Thread the adjusting screw and wheel assembly into the anchor pin support and install the clamp-type ad-

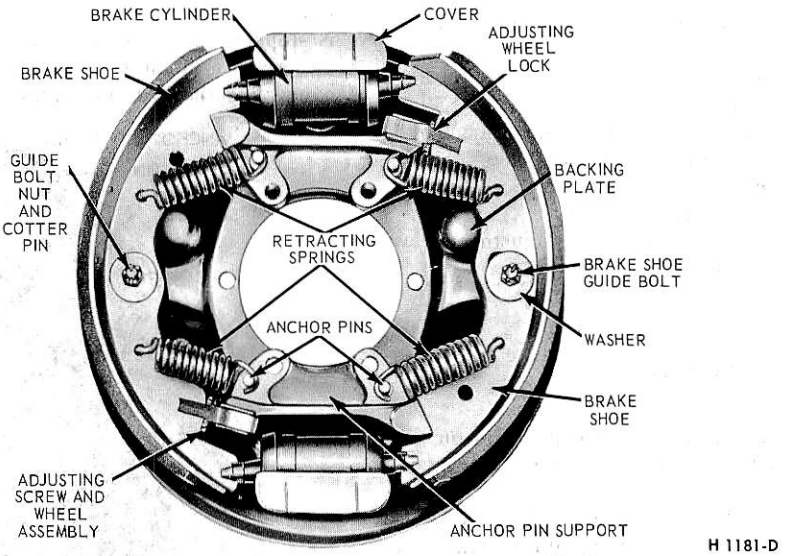

FIG. 21—Two Cylinder Brake—Rear—P-500-5000 Series

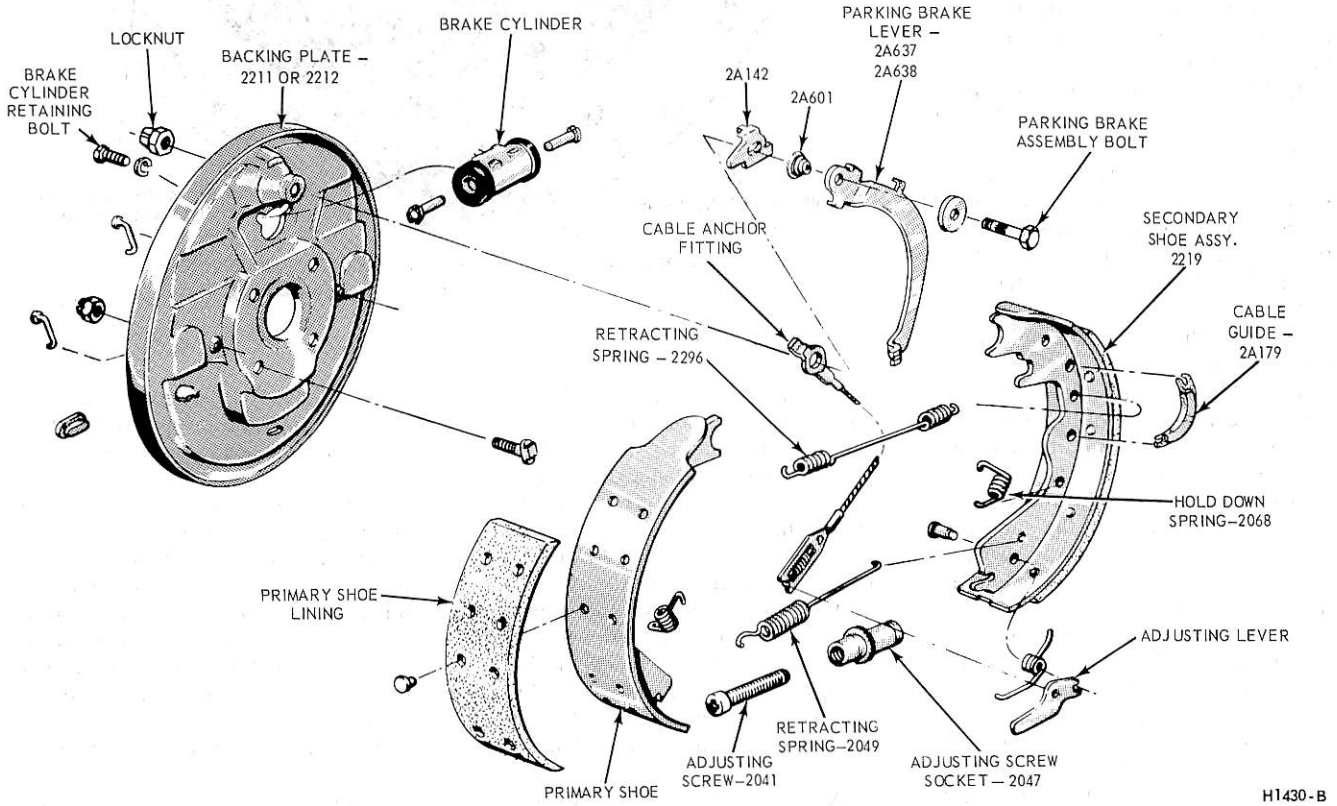

FIG. 22—Rear Web Ledge Single Anchor Brake—Disassembled View

justing wheel lock. Thread the adjusting wheel into the support so that the brake shoe will rest against the adjusting wheel end.

3. Place the brake shoe against the backing plate, insert the ends in the brake cylinder links, and install the shoe guide bolt, washer and nut (Fig. 21). Finger tighten the nut, then back off one full turn, and install the cotter pin.

4. Install the four retracting springs with the tool shown in Fig. 18.

5. Remove the cylinder clamps, install the drum or the hub and drum assembly, then install the wheel assembly. **Align the marks on the hub and drum during installation.**

6. Bleed the brake system and adjust the brakes. Lower the truck.

600-950 SERIES—FRONT—WAGNER

Removal

1. Raise the vehicle until the wheels clear the floor. Remove the wheel, and then remove the drum or the hub and drum assembly. **Mark the hub and drum to aid assembly in the same position.**

On a vehicle equipped with a vacuum booster, be sure the engine is stopped and there is no vacuum in the system before disconnecting the hydraulic lines.

2. Remove both brake shoe return springs (Fig. 23).

3. Remove the C-washers and flat washers from the hold-down studs. Lift the shoes off the backing plate.

4. To remove the adjuster assembly from the shoe, unhook the wedge spring from the wedge and the coil spring from the shoe web. Work the spring coil off the lever pivot pin and slide the spring hook from the plug lever pin. Pull the adjuster lever from the back of the shoe and remove the plug, wedge washer, wedge and wedge guide.

Installation

1. To install the adjuster assembly, position the wedge guide on the shoe web with the serrations facing away from the shoe. Position the wedge on the shoe web with the serrations against the matching serrations on the wedge guide.

2. Insert the plug, from drum side of shoe, guiding its shank through the hole in the shoe and over the wedge guide and wedge.

3. From the back of the shoe, install the actuator lever, guiding the center pin into the mating hole of the plug. Install the wedge washer.

4. Position the U hook of the coil spring on the plug lever pin. Attach the end of the wedge spring to the hook, then install the coil spring over the lever pivot pin. Install the outer end of the coil spring over the edge of the shoe web.

5. Connect the wedge spring to the wedge.

6. Fully retract the wedge against the lever pivot pin by pressing on the plug. If the plug protrudes more than 0.005 inch above the lining, clamp the shoe in a vise so that the vise jaws bear against the adjuster lever and file down the plug. **Be careful not to file a flat spot on the lining.** If the plug is fully extended, and is 0.005 inch below the lining surface, replace the plug.

7. Place a shoe assembly on the backing plate with the shoe guide stud inserted through the hole in the shoe web. Locate the shoe assemblies to the wheel cylinders (Fig. 23).

8. Install the flat washers and C-washers on the hold-down studs to secure the shoes.

9. Install the brake shoe return springs so that the long end is hooked at the anchor end of the shoe.

10. Install the hub and drum assembly.

11. Adjust the brakes as detailed in Section 2.

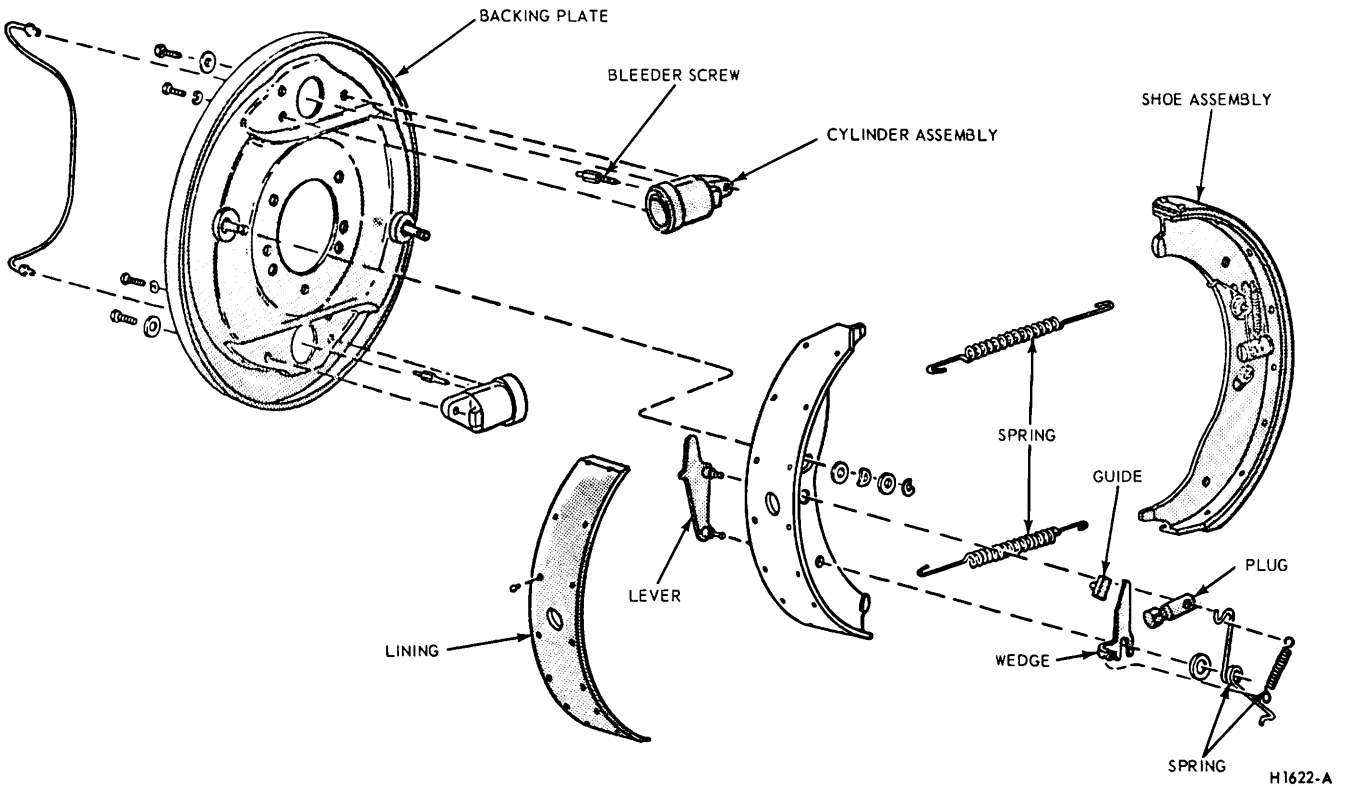

FIG. 23—Two-Cylinder Brake Shoe (Wagner) Front—Disassembled View

600-950 SERIES—REAR—WAGNER

Removal

1. Raise the truck until the wheels clear the floor. Remove the wheel, and then remove the drum or the hub and drum assembly. It may be necessary to back off the adjusting wheels slightly to free grooved drums. Take care not to back off adjustment so much that adjusting wheel is jammed against the friction ring on the adjuster screw as this may damage the ring.

Mark the hub and drum to aid assembly in the same position.

On a truck equipped with a vacuum booster, be sure the engine is stopped and there is no vacuum in the system before disconnecting the hydraulic lines.

2. Unhook the two automatic adjuster springs (Fig. 24). Remove each long adjuster link by pivoting back the adjusting wheel cranks until their slots align with the link hooks. Lift out the links, then slide the hooks from the anchor pin cranks. Remove the short links by rotating the anchor cranks until the link hooks clear the eccentrics on the shoe webs, then remove the smaller hooks from the cranks.

3. Spread the anchor crank C-washers and remove the cranks (it is usually unnecessary to remove the adjusting wheel cranks). If shoes are to be relined, remove adjuster eccentrics from the shoe webs by unscrewing their self-tapping screws.

4. Remove the shoe retraction springs by sliding the looped ends off the pins. Remove the shoe hold-down lock wires, castellated nuts and plain washers and lift the shoes off the backing plate.

5. Unthread the adjusting screw and adjusting wheel from each of the anchor supports.

Installation

1. Insert the adjusting wheels in the anchor support slots and thread in the adjuster screws from the shoe side, friction ring end toward the shoe. For new linings, back off adjusters, taking care not to jam the adjusting wheels. Do not lubricate adjuster screws.

2. Position the shoes (Fig. 24) to the backing plate. Locate shoe with its toe (cutaway portion of web) positioned in the adjuster slot, heel in the anchor pin slot. Install hold-down bolt, plain washer and castellated nut finger tight, then back off nut one turn and install the lockwire.

3. Install the retracting springs in the shoe web, longest end at the adjuster, and hook the springs over the pins.

4. On each shoe web, install the adjuster hex eccentric, tightening the self-tapping screw finger-tight to permit final adjustment of the eccentrics.

5. Position the anchor cranks on the anchor pins with the long end toward the shoes. Install and crimp the C-washers.

6. At each crank, install the short link with the small hook end into the short arm of the crank. Install the other link end around the eccentric on the shoe web.

7. Install the long link S-hook end to the long arm of the crank. Rotate the adjusting wheel crank so that slot lines up with link U-hook end and insert the hook. Rotate the adjusting wheel crank back to the approximate adjusting position.

8. Install the adjuster spring with the short end on the adjusting wheel crank finger and the long end on the upper groove of the spring retainer pin.

9. Rotate each hex eccentric until the linkage aligns the adjusting wheel crank pawl with the center line of the adjusting screws. **A small drill point recess located on the anchor support is the aligning mark.** With the eccentrics adjusted, install the self-tapping screws.

10. Install the drum or the hub and

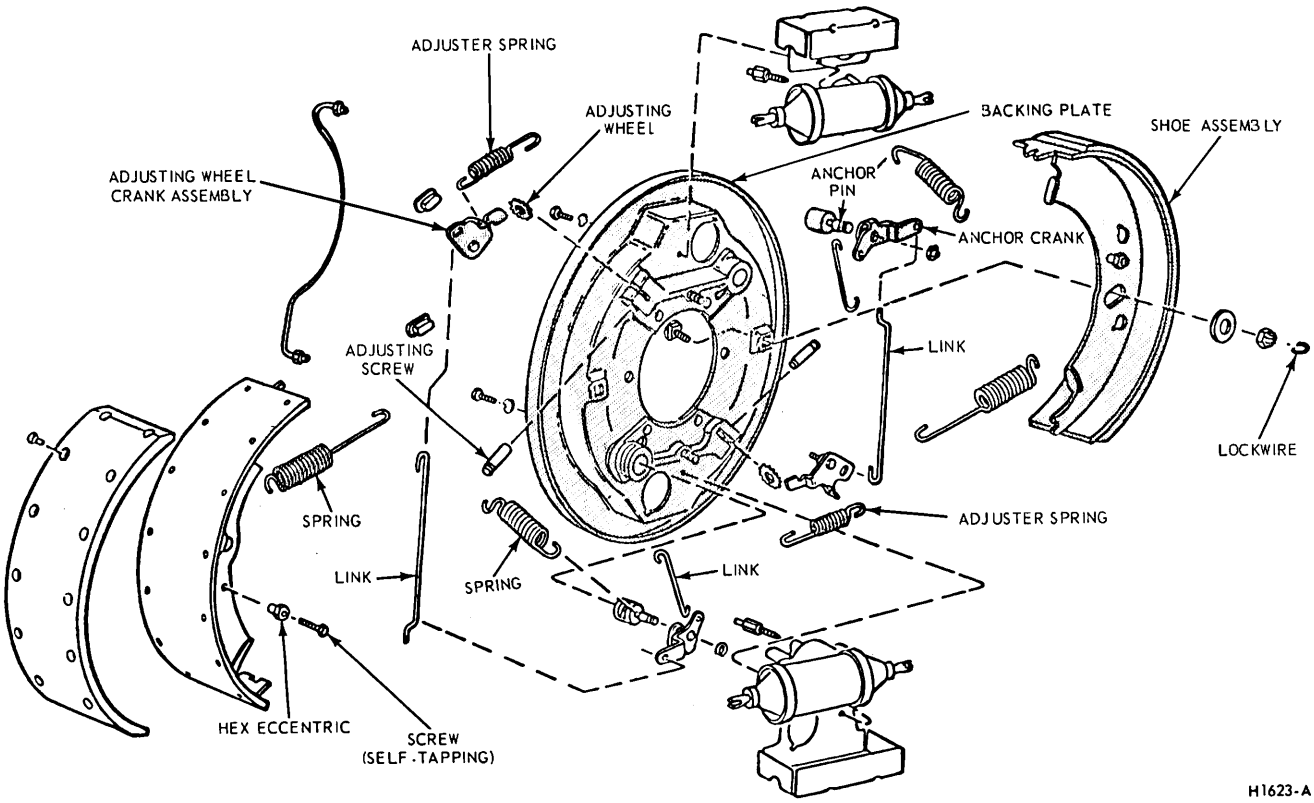

FIG. 24— Two-Cylinder Brake Shoe—Rear (Wagner) Disassembled View

drum assembly, then install the wheel assembly. Align the marks on the hub and drum during installation.

11. Bleed the brake system and adjust the brakes. Lower the vehicle.

500-800 SERIES *(EXCEPT P-500)* FRONT—KELSEY HAYES

Removal

Refer to Figure 25.

1. Raise the vehicle until the wheel clears the floor. Remove the wheel, drum and hub assembly. Refer to Part 2-1, Section 2.

2. Clamp the wheel cylinder boots against the ends of the cylinder.

3. Remove the brake shoe retracting springs from both shoes.

4. Remove the adjusting lever link, anchor plate and the adjusting lever spring.

5. Remove the hold down spring cups, springs and the adjusting lever.

6. Remove the brake shoes and adjuster screw assembly from the backing plate.

7. Remove the hold down pins from the backing plate and check the pins for straightness.

Installation

Refer to Figure 25.

1. Clean all brake dust from the brake assembly parts with a **clean dry** rag.

2. Coat all points of contact between the shoes and other brake parts with high temperature grease (C1AZ-19590-B or E).

3. Coat the adjuster screw with high temperature grease (C1AZ-19590-B or E) before assembly. Thread the adjuster screw into the adjuster screw sleeve.

4. Position the brake shoes on the backing plate and install the adjusting lever, hold down pins, springs and cups.

5. Position the adjuster screw assembly on the brake shoes so that the star wheel is opposite the adjusting slot in the backing plate. Install the adjusting lever spring.

6. Install the anchor plate and adjusting lever link.

7. Install the secondary brake shoe retracting spring.

8. Install the primary brake shoe retracting spring.

9. Remove the clamp from the wheel cylinder boots.

10. Install the wheel, drum and hub assembly.

11. Adjust the brakes. Subsequent adjustment will be automatic.

500-800 SERIES (EXCEPT P-500)— REAR—KELSEY HAYES

Removal

Refer to Figure 25.

1. Raise the truck until the wheel clears the floor.

2. Remove the wheel, hub and drum assembly. Refer to Part 2-1, Section 2.

3. Clamp the brake cylinder boots against the ends of the cylinder with brake piston clamps.

4. Note the two different types of brake shoe retracting springs and remove the springs.

5. Remove the brake shoe hold down post cotter key, nut, and shoe hold down washer.

6. Loosen and remove the eccentric adjuster bolt, lock washer, eccentric and adjusting link.

7. Remove the shoe and lining assembly from the backing plate.

8. Remove the anchor block spring and slide the adjuster assembly from the shoe web.

9. Remove the adjuster star wheel and screw from the adjuster block. Unthread the star wheel from the adjuster screw.

Installation

Refer to Figure 25.

1. Wipe all brake dust from the brake assembly parts with a **clean dry** rag. Coat all points of contact between brake shoes and other parts with high temperature grease (C1AZ-19590-B or E).

2. Coat the adjuster screw and the inside of the adjuster block with high temperature grease (C1AZ-19590-B or E).

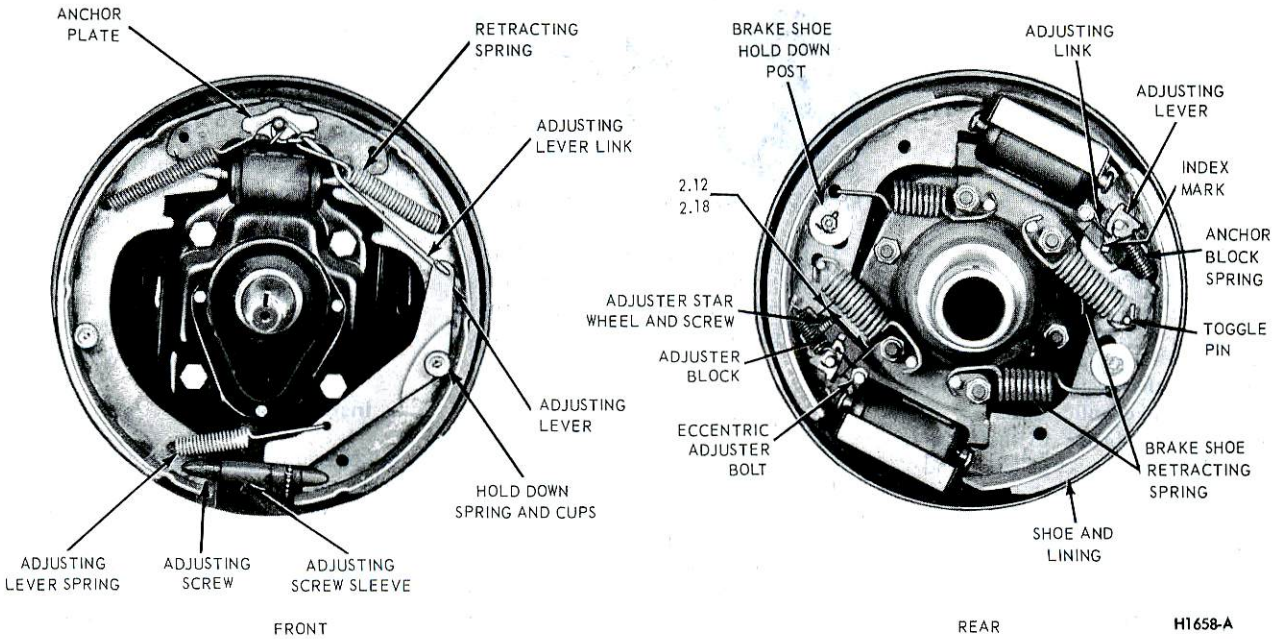

FIG. 25—Kelsey Hayes Hydraulic Brake Assemblies—Front and Rear

3. Thread the adjuster screw onto the star wheel and insert the adjuster screw assembly into the adjuster block. Maintain a 2.12-2.18 inch dimension from the end of the adjuster block to the adjuster screw web slot.

4. Install the adjuster assembly onto the shoe web and attach the anchor block spring.

5. Place the brake shoe over the retracting spring toggle pin and insert the ends of the shoe in the wheel cylinder links.

6. Install the shoe hold down washer and nut. Do not install the cotter pin.

7. Install the four brake shoe retracting springs. Make sure the retracting springs are installed as shown in Fig. 25. On 15 x 5 inch brakes the inner hook ends face the wheel cylinders. On 15 x 4 inch brakes the inner hook ends face the center of the axle.

8. Install the adjusting link, eccentric, lockwasher and adjuster bolt. Do not tighten.

9. Remove the brake piston clamps.

10. Tighten the shoe hold down nut until there is 0.015-0.025 inch clearance between the shoe and hold down washer with the shoe held against the backing plate. Install the cotter pin.

11. Center the shoes on the backing plate. Using a 1/2 inch wrench, rotate the adjuster eccentric until the adjusting lever is at the index mark (Fig. 25). Tighten the eccentric adjuster bolt to specification.

12. Install the wheel, hub and drum assembly.

13. Adjust the brake to obtain a slight drag. Subsequent adjustments will be automatic.

BRAKE WHEEL CYLINDER

REMOVAL

1. Remove the wheel, drum, and brake shoes. Remove the cylinder-to-shoe connecting links.

2. Disconnect the brake line from the brake cylinder. **On a vehicle equipped with a vacuum booster, be sure the engine is stopped and there is no vacuum in the system before disconnecting the hydraulic lines.**

3. Remove the brake cylinder retaining bolts and lockwashers, and then remove the cylinder from the backing plate. On the two-cylinder brake assemblies, remove the cover with the brake cylinder.

INSTALLATION

1. Position the brake cylinder on the backing plate and install the retaining bolts and lockwashers. On the two-cylinder brake assemblies, install the cover with the brake cylinder.

2. Install a new gasket on the brake line fitting and connect the line to the brake cylinder(s).

3. Install the brake shoes and the connecting links between the shoes and cylinder. Install the drum and the wheel.

BRAKE BACKING PLATE

F-100-250, E-100-200 AND BRONCO SERIES (EXCEPT 4 x 4 FRONT)

Removal

1. Remove the wheel and brake drum. Disconnect the brake line from the brake cylinder and submerge the end of the brake line in a can containing a small amount of brake fluid. This will minimize hydraulic line bleeding. Remove the brake shoes and the brake cylinder. On the rear wheels, disconnect the parking brake lever from the cable.

2. If the rear backing plate is being removed, rotate the axle shaft so that the hole in the axle shaft flange aligns with the backing plate retaining nuts, then remove the nuts. Pull the axle shaft assembly out of the housing with tool 4235-C, and a slide hammer tool T50T-100-C, (Fig. 26). Lift off the backing plate.

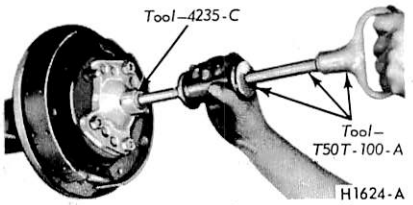

FIG. 26—Axle Shaft Removal

If the front backing plate is being replaced, remove the bolts and nuts that secure the plate to the front wheel spindle and lift off the plate.

Installation

1. Position the rear backing plate on the retaining bolts in the axle housing flange. Insert the axle shaft assembly into the housing so that the splines engage the differential side gear, with the bearing retainer sliding onto the retaining bolts and against the carrier plate. Install the retaining nuts through the access hole in the axle shaft flange.

Position the front backing plate on the wheel spindle and install the retaining bolts and nuts.

2. Install the brake cylinder and brake shoes. On a rear brake, connect the parking brake cable to the lever.

3. Connect the brake line to the brake cylinder, then install the wheel and brake drum. Adjust the brake shoes and bleed the hydraulic system.

F-100 4 x 2 SERIES WITH SPICER 60-3 AXLE—REAR

Brake backing plate removal and installation procedure is similar to that used on the F-100 Ford axle. However, certain precautions are necessary if a new backing plate is installed, since the side-to-side end-play of the rear axle shafts can be affected. When replacing a brake backing plate with a new or different plate, refer to Part 4- Rear Axle, for assembly procedure, including end-play adjustments, etc.

F-100-250 4 x 4 AND BRONCO SERIES—FRONT

Removal

1. Raise the vehicle on a hoist.

2. Remove the hub grease cap. Remove the hub retaining snap ring, and slide the splined driving hub from between the axle shaft and the wheel hub. Remove the driving hub spacer.

If the vehicle is equipped with a locking type hub, refer to Part 4-4.

3. Remove the lock nut, washer, and wheel bearing adjusting nut from the steering spindle. Remove the wheel, hub and drum as an assembly (Fig. 27). The wheel outer bearing will be forced off the spindle at the same time. Remove the wheel inner bearing cone.

4. Remove the cap screws which retain the brake backing plate and spindle to the spindle arm. Remove the brake backing plate and spindle.

Installation

1. Position the spindle and the brake backing plate on the steering arm, and then install the retaining cap screws.

2. Install the wheel inner bearing cone on the spindle. Install the wheel hub and drum. Install the driving hub spacer and then the wheel outer bearing cone and adjusting nut.

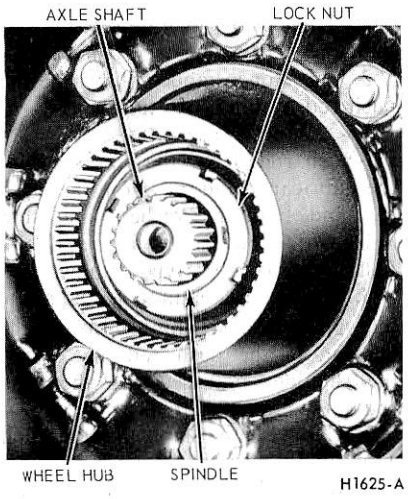

FIG. 27—Front Wheel Hub—4-Wheel Drive

3. Rotate the wheel in both directions and at the same time tighten the inner locknut to 50 ft-lbs to bring the bearing rollers into proper contact. After the bearings are firmly seated, back off the inner locknut and retighten to 30 to 40 ft-lbs while hub is rotated. Back off the inner locknut 135 degrees to 150 degrees. Assemble the lockwasher by turning the nut to the nearest hole in the washer lock. Install the outer lock nut and torque to 50 ft-lbs, (Fig. 27).

4. Install the driving hub and snap ring. Install the grease cap.

300 THROUGH 950 SERIES

Removal

1. From front wheel spindles remove the hub and drum attaching parts (axles under 9,000 lbs capacity-grease cap and gasket if so equipped, cotter pin, bearing adjusting nut and flat washer) (Axles 9,000 lbs capacity or over-grease cap and gasket, lock nut, dimpled washer, locking ring, and bearing adjusting nut and pin assembly). Then, remove the outer wheel bearing and the hub and drum assembly from the spindle.

2. On rear wheels, remove the rear axle shaft flange retaining nuts and axle shaft. Remove the rear wheel bearing lock nut, lock washer, and adjusting nut, then remove the hub and drum assembly from the axle housing. Discard the grease seal.

3. Remove the brake shoes and adjusting screw from the backing plate as outlined in this section. Disconnect the brake line from the brake cylinder and submerge the end of the brake line in a can containing a small amount of brake fluid. This will minimize hydraulic line bleeding.

4. Remove the backing plate retaining bolts and nuts, then remove the backing plate from the front wheel spindle or rear axle housing.

5. Remove the attaching bolts and lock washers, and the brake cylinder from the backing plate.

Installation

1. Assemble the brake cylinder to the backing plate with the attaching bolts and lock washers.

2. Mount the backing plate to the front wheel spindle or to the rear axle housing flange, and secure with the attaching bolts and nuts.

3. Install the brake shoes and adjusting screw to the backing plate as outlined in this section. Connect the brake line to the brake cylinder.

4. Install a front wheel hub and drum assembly and the outer wheel bearing to the spindle. Install the hub and drum attaching parts (axles under 9,000 lbs capacity-flat washer, bearing adjusting nut, cotter pin, grease cap, and gasket if so equipped, axles 9,000 lbs. capacity or over-bearing adjusting nut and pin assembly, locking ring, dimpled washer, lock nut, and grease cap and gasket). Adjust the front wheel bearings as outlined in Part 3-5.

Install a rear wheel hub and drum assembly on the rear axle housing. **The rear hub oil seal must be replaced whenever a hub is removed or installed.** Install the outer bearing and the adjusting nut, then adjust the wheel bearings. Install the lock washer and lock nut, then torque to specifications. Install the rear axle shaft, gasket and attaching nuts, then torque to specifications.

5. Install the wheel and tire.

6. Bleed the hydraulic system and adjust the brake shoes.

BRAKE MASTER CYLINDER

F-100-600,P-350-4000 AND N-500-600 SERIES—POWER BRAKE—DASH MOUNTED BOOSTER

Removal

1. With the engine stopped, depress the brake pedal to expell vacuum or air pressure from the brake booster system.

2. Disconnect the hydraulic lines from the brake master cylinder.

3. Remove the brake booster to master cylinder retaining nuts and lockwashers. Remove the master cylinder from the brake booster.

Installation

1. Before installing the master cylinder, check the distance from the outer end of the booster assembly push rod to front face of the brake booster assembly. Turn the push rod adjusting screw in or out as required to obtain the specified length (Fig. 8, Part 2-5).

2. Position the master cylinder assembly over the booster push rod and onto the two studs on the booster assembly. Install the attaching nuts and lockwashers and torque them to specifications.

3. Connect the hydraulic brake system lines loosely to the master cylinder.

4. Bleed the hydraulic brake system as outlined in this section of the manual. Centralize the differential valve as outlined in this Section of the manual. Then, fill the dual master cylinder reservoirs to within 1/4 inch of the top with the specified brake fluid. Install the gasket (diaphragm) and filler cap.

F-100-350 AND P-350-4000 SERIES—NON-POWER BRAKE

Removal

Refer to Figure 28.

1. Working from inside the vehicle below the instrument panel, disconnect the wires from the stop light switch.

2. Disconnect the dust boot from the rear of the master cylinder at the dash panel.

3. Remove the retaining nut, shoulder bolt, spacers and bushing securing the master cylinder push rod and the stop light switch to the brake pedal assembly. Remove the switch.

4. Remove the boot from the master cylinder push rod.

5. Disconnect the brake hydraulic system lines from the master cylinder.

6. Remove the master cylinder to dash panel retaining screws, and remove the master cylinder.

Installation

1. Position the master cylinder as-

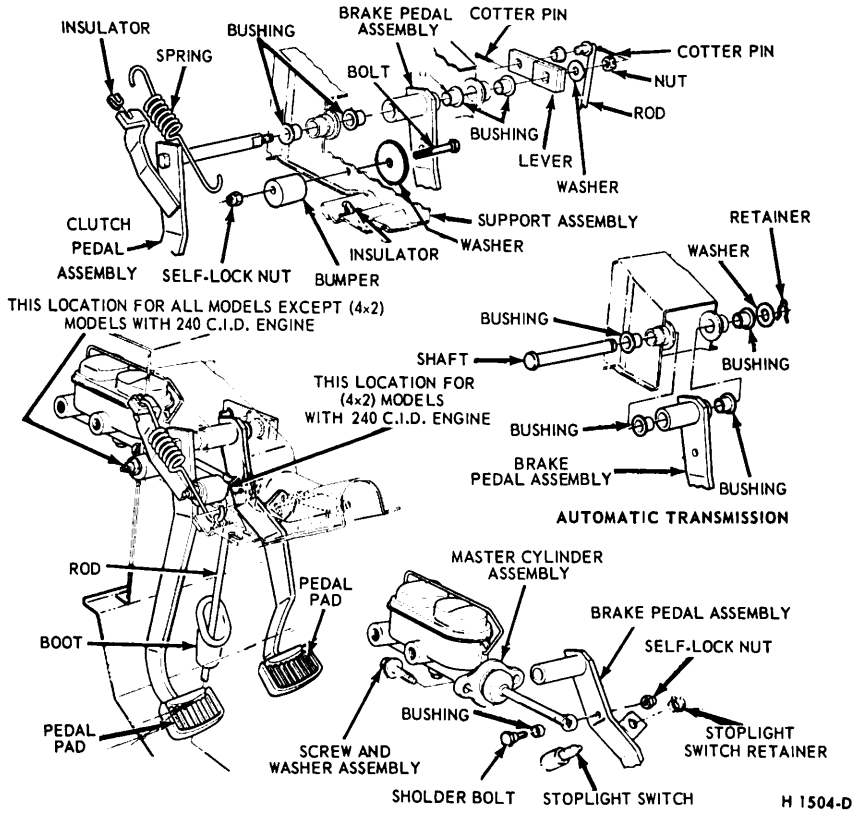

FIG. 28—Dual Master Cylinder and Brake Pedal Installation—Standard Brakes—F-100, 250, 350

sembly on the dash panel within the engine compartment and install the retaining screws and washers. Tighten the screws to specification.

2. Connect the hydraulic brake system lines loosely to the master cylinder.

3. Working from inside the vehicle below the instrument panel, position the boot over the push rod and secure the boot to the master cylinder.

4. Lubricate the push rod bushing with lubricant (Lubriplate). Position the bushing in the push rod.

5. Position the stop light switch on the push rod. Install the shoulder bolt and spacers. **Make sure the bushings and spacers are installed properly.** Secure the push rod and stop light switch to the brake pedal assembly with the self-locking nut.

6. Connect the wires to the stop light switch.

7. Bleed the hydraulic brake system as outlined in this section of the manual. Centralize the differential valve as outlined in this Section of the manual. Then, fill the dual master cylinder reservoirs to within 1/4 inch of the top with the specified brake fluid. Install the gasket (diaphragm) and filler cap.

ECONOLINE AND BRONCO

Removal

1. Disconnect the wires from the stoplight switch (Figs. 29 and 30).

2. Disconnect the brake hydraulic system lines at the master cylinder.

3. On Bronco models, remove the hair pin retainer and slide the stop light switch off the brake pedal pin just far enough for the switch outer hole to clear the pin. Remove the stop light switch from the pin.

On Econoline models, remove the shoulder bolt and nut retaining the push rod to the brake pedal. Remove the push rod bushing.

4. Slide the master cylinder push rod off the brake pedal pin. Remove the bushing and washers.

5. Remove the master cylinder retaining bolts and remove the master cylinder.

Installation

1. Position the master cylinder assembly on the dash panel and install the retaining bolts. Torque the bolts to specification.

2. Connect the hydraulic brake system lines to the master cylinder.

3. On Bronco models, lubricate the push rod bushing with lubricant (SAE 10W-20W-30). Insert the bushing in the push rod. Coat the washers with the lubricant, and position the push rod and bushing, washers and stop light switch on the brake pedal pin. Install the hair pin type retainer.

4. On Econoline models, lubricate the push rod bushing. Insert the bushing in the push rod and install the shoulder bolt securing the push rod to the brake pedal.

5. Connect the stop light switch wires to the switch.

6. Bleed the hydraulic brake system.

F-500-950, N-500-750 AND T-800-850 SERIES—SINGLE BRAKE SYSTEM

Removal

If the vehicle is equipped with a vacuum or air booster, the engine must be stopped and all vacuum or air pressure must be expelled from the booster system before the hydraulic lines are disconnected.

1. If the stoplight switch is mounted on the master cylinder, disconnect the stoplight switch wires from the switch, and disconnect the brake line from the brake fitting.

2. Force as much brake fluid as possible from the master cylinder into a suitable container by pushing down the brake pedal all the way several times.

3. On a vehicle with conventional brakes, disconnect the rubber boot from the rear end of the master cylinder in the cab. Remove the bolts that hold the master cylinder against the dash panel, and lift the cylinder away from the push rod and out of the engine compartment.

On vehicles equipped with a dash-mounted booster, remove the nuts and washers that secure the master cylinder to the power booster unit, and remove the master cylinder.

Installation

1. On a vehicle with conventional brakes, position the rubber boot on the piston push rod, guide the master cylinder over the end of the push rod and position the cylinder against the mounting surface. Install the mounting bolts and torque them to specifications.

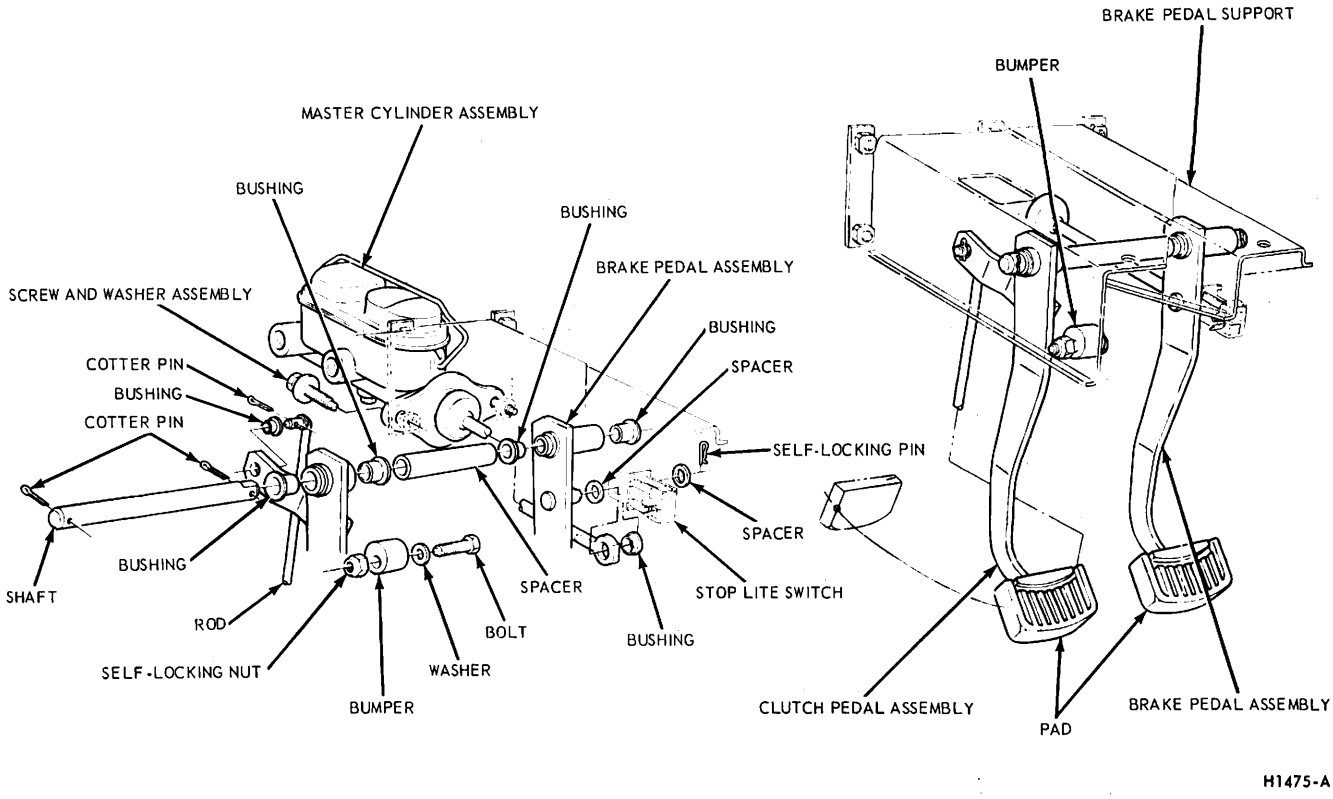

FIG. 29—Brake Master Cylinder and Brake Pedal Installation—Bronco

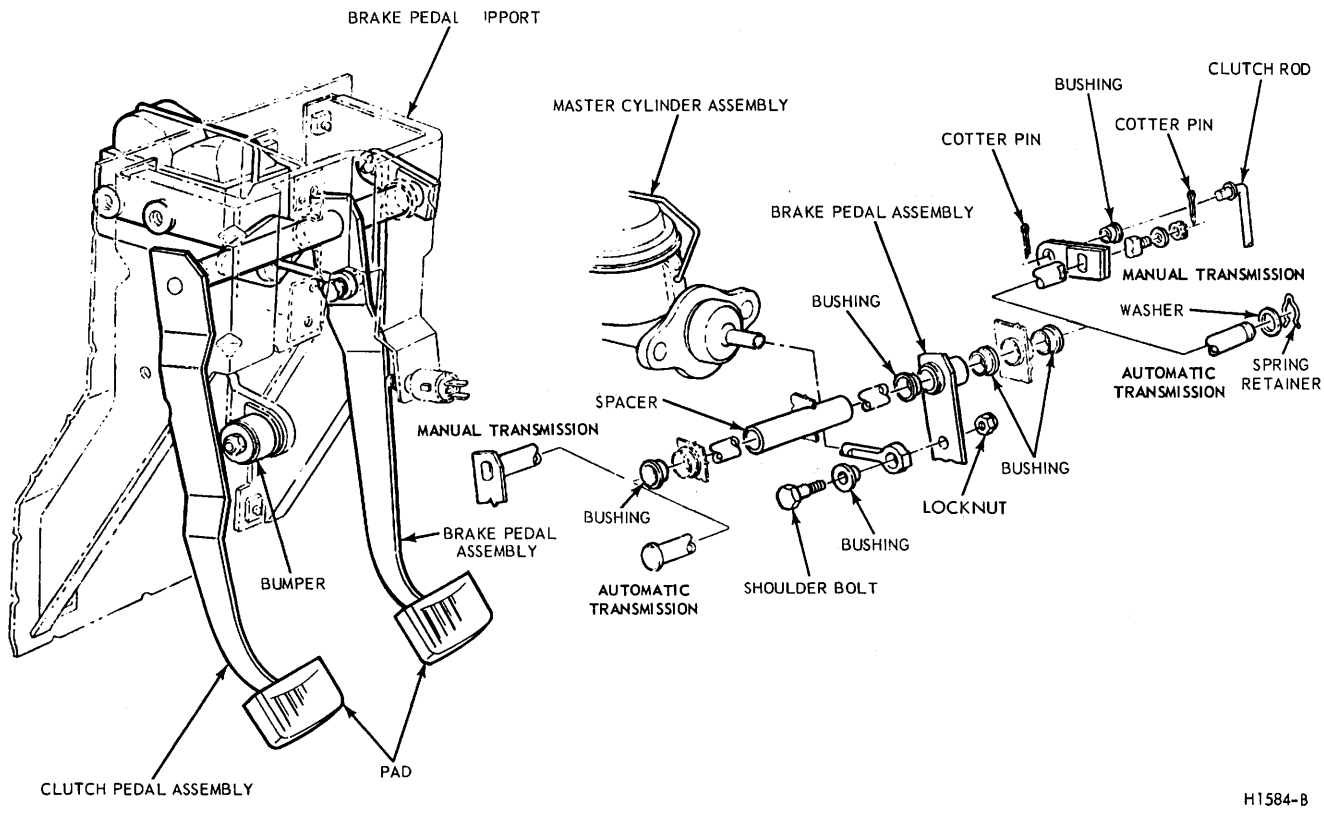

FIG. 30—Brake Master Cylinder and Brake Pedal Installation—Econoline

On vehicles equipped with a dash-mounted booster, install the master cylinder over the push rod onto the two studs in the power booster body. Install the lock washers and retaining nuts. Torque the nuts to specifications.

2. Connect the brake line to the master cylinder fitting, but leave the brake line fitting loose.

3. Fill the master cylinder reservoir with the specified brake fluid to within 1/4 inch of the top of the filler neck.

4. Push the brake pedal down slowly by hand several times to let air escape at the brake line fitting. Hold the pedal down and tighten the brake line fitting. Release the brake pedal. **Do not release the brake pedal until the fitting is tightened as additional air will be introduced into the master cylinder.**

On vehicles equipped with dash-mounted booster, the cylinder can be bled at the bleed screw on the cylinder.

On a vehicle with a frame-mounted brake booster assembly, the master cylinder can be bled at the booster bleed screw(s).

5. After seeing that the master cylinder reservoir is filled with the specified brake fluid to within 1/4 inch of the top of the filler neck, install the filler cap. Wipe off any fluid from the outside of the cylinder and brake line.

6. If the stoplight switch is mounted on the master cylinder connect the stoplight switch wires to the switch.

7. Connect the rubber boot to the end of the cylinder.

8. Check and, if necessary, adjust the brake pedal free-travel.

F-,N-, AND B-SERIES SPLIT BRAKE SYSTEM AND FRAME MOUNTED BOOSTER

Removal

Refer to figures 34 and 31.

1. Working from inside the vehicle below the instrument panel, disconnect the wires from the stop light switch.

2. On F- and N-Series, remove the retaining nut, shoulder bolt, spacers and bushing securing the master cylinder push rod and the stop light switch to the brake pedal assembly. Remove the switch.

On B-Series, remove the hair pin clip from the brake pedal pin. Remove the push rod, spacers, stop light switch, and bushing from the brake pedal pin.

3. Remove the boot from the master cylinder push rod.

4. Disconnect the brake hydraulic system lines from the master cylinder.

5. Remove the master cylinder to dash panel retaining screws and remove the master cylinder.

Installation

1. Position the master cylinder assembly on the dash panel within the engine compartment and install the retaining screws and washers. Tighten the screws to specification.

2. Connect the hydraulic brake system lines loosely to the master cylinder.

3. Lubricate the push rod bushing with lubricant (Lubriplate). Position the bushing in the push rod.

4. On F- and N-Series, position the stop light switch on the push rod, install the shoulder bolt and spacers. **Make sure the bushings and spacers are installed properly.** Secure the push rod and stop light switch to the brake pedal assembly with the self-locking nut.

On B-Series, install the spacers, push rod, bushing and stop light switch on the brake pedal pin. Install the hair pin retainer.

5. Connect the wires to the stop light switch.

6. Bleed the hydraulic brake system as outlined in this section of the man-

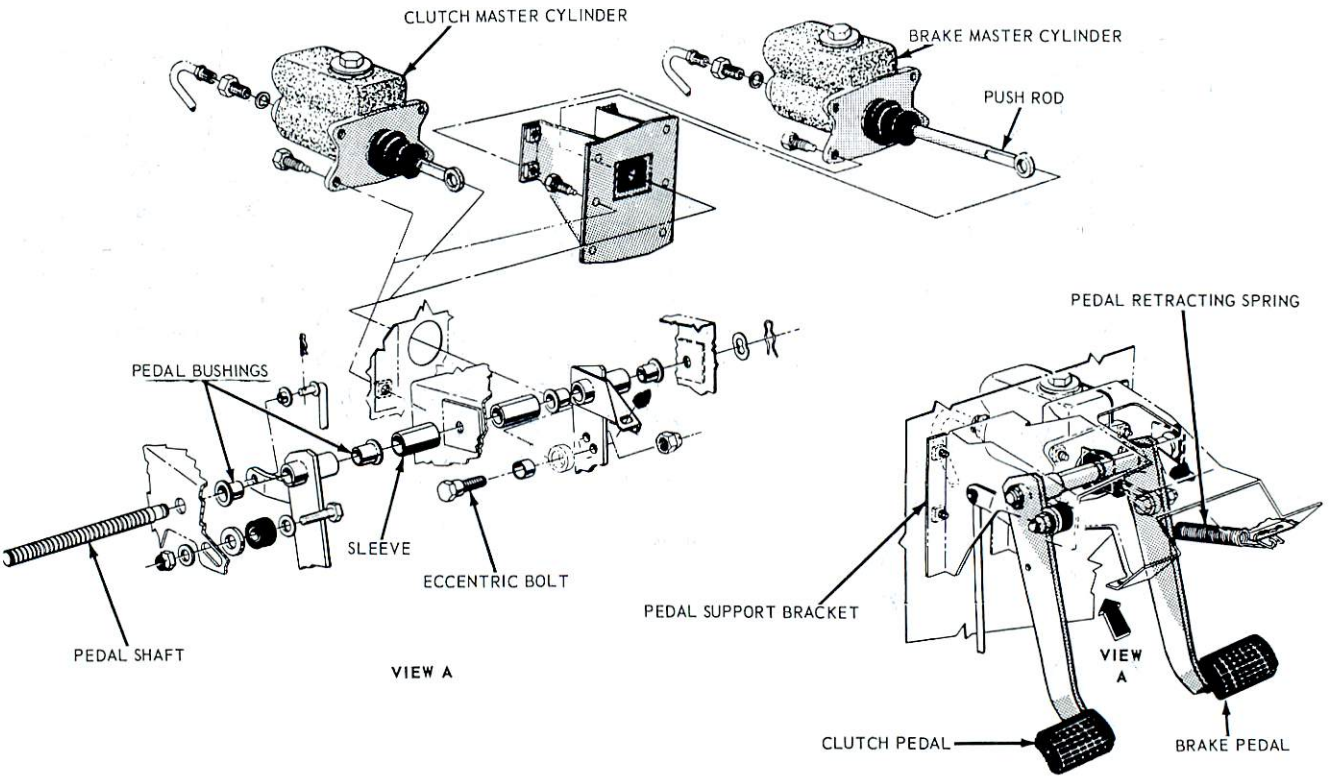

FIG. 31—F-, N-, or T-Series Brake Pedal and Related Parts

ual. Centralize the differential valve as outlined in this Section of the manual. Then, fill the dual master cylinder reservoirs to within 1/4 inch of the top with the specified brake fluid. Install the gasket (diaphragm) and filler cap.

P-500-5000-SERIES

Removal

1. If the vehicle is equipped with a vacuum booster, the engine must be stopped and all vacuum must be expelled from the booster system before the hydraulic lines are disconnected.
2. Turn the front wheels all the way to the left, and remove the fender apron attaching screws so that the apron can be moved to provide access to the master cylinder.
3. Disconnect the stoplight switch wires from the switch.
4. Disconnect the brake line from the brake tube fitting.
5. Force as much brake fluid as possible from the master cylinder into a suitable container by pushing down the brake pedal all the way several times.
6. Disconnect the rubber boot from the end of the master cylinder.
7. Remove the brake pedal return spring, remove the cotter pin from the clevis pin, and remove the master cylinder push rod and boot. Remove the three mounting bolts and remove the master cylinder from the mounting bracket and away from the vehicle.

Installation

1. Assemble the master cylinder to the mounting bracket and secure with the three mounting bolts. Install the push rod and boot to the front of the master cylinder. Connect the front end of the push rod to the upper holes of the brake pedal extension with the clevis pin, and secure with a cotter pin. On a vehicle equipped with a vacuum booster, connect the push rod and insert the clevis pin at the lower holes of the pedal extension. Install the brake pedal retracting spring.
2. Connect the brake line to the master cylinder fitting, but leave the brake line fitting loose.
3. Fill the master cylinder with heavy-duty brake fluid to the specified level (1/4 inch from the top).
4. Push the brake pedal down slowly by hand several times to let air escape at the brake line fitting. Hold the pedal down and tighten the brake line fitting. Do not release the brake pedal until the fitting is tightened, as additional air will be introduced into the master cylinder. Repeat this procedure until air ceases to escape at the fitting and a firm pedal is obtained.
5. After seeing that the master cylinder reservoir is filled with the specified brake fluid to within 1/4 inch of the top of the reservoir, install the filler cap. Wipe off the fluid from the outside of the cylinder and brake line.
6. Connect the stoplight switch wires to the switch.
7. Connect the rubber boot to the end of the cylinder. Reposition the fender apron and secure with the five retaining bolts.
8. Check and, if necessary, adjust the brake pedal free travel.

C-SERIES
SINGLE BRAKE SYSTEM

Removal

If the vehicle is equipped with a vacuum or air booster, the engine must be stopped and all vacuum or air pressure must be expelled from the booster system before the hydraulic lines are disconnected.

1. Roll back the floor mat, remove the floor plate, and then disconnect the hydraulic line from the master cylinder.
2. Force as much brake fluid as possible from the master cylinder into a suitable container by pushing down the brake pedal all the way several times.
3. Disconnect the rubber boot from the rear end of the master cylinder in the cab.
4. Remove the two mounting bolts and lower the master cylinder away from the push rod and out of the cab.

Installation

1. With the rubber boot on the piston push rod, guide the master cylinder over the end of the push rod, and position the cylinder against the mounting surface. Install the mounting bolts, and torque them to specifications.
2. Connect the brake line to the master cylinder fitting, but leave the brake line fitting loose.
3. Fill the master cylinder reservoir with the specified brake fluid to within 1/4 inch of the top of the filler neck.
4. Push the brake pedal down slowly by hand. Hold the pedal down and tighten the brake line fitting. Release the brake pedal. **Do not release the brake pedal until the fitting is tightened as additional air will be introduced into the master cylinder.** Repeat this procedure until air ceases to escape at the fitting and a firm pedal is obtained.

On a vehicle with a brake booster assembly, the master cylinder can be bled at the booster bleed screw(s).

5. After seeing that the master cylinder reservoir is filled with the specified brake fluid to within 1/4 inch of the top of the filler neck, install the filler cap. Wipe off any fluid from the outside of the cylinder and brake line.
6. Connect the rubber boot to the end of the cylinder. Install the floor plate and secure with the seven retaining screws, and place the floor mat in its proper position.
7. Check and, if necessary, adjust the brake pedal free-travel.

C-SERIES—
SPLIT BRAKE SYSTEM

Removal

Refer to Figure 36.

All vacuum must be relieved from the booster before hydraulic lines are disconnected.

1. Disconnect the hydraulic lines from the master cylinder. Trap the fluid drip with a shop towel or plug the ports.
2. Remove the bolt and nut connecting the push rod to the brake pedal bell crank and remove the stop light switch, bushing and spacers.
3. Remove the master cylinder mounting bolts and remove the master cylinder from the vehicle.

Installation

Refer to Figure 36.

1. If the master cylinder is being replaced, transfer the outlet ports to the new master cylinder.
2. Position the master cylinder to the dash panel and install the mounting bolts.
3. Assemble the stop light switch, bushing and spacers on the push rod and install the bolt connecting the push rod to the bell crank.
4. Connect the primary and secondary outlet tubes and tighten to specifications.
5. Bleed the brake system.

DUAL BRAKE MASTER CYLINDER PRESSURE DIFFERENTIAL VALVE ASSEMBLY

Refer to Figures 5 and 6.

REMOVAL

1. Raise the vehicle on a hoist. Disconnect the brake warning light wire from the pressure differential valve assembly switch. **To prevent damage to the brake warning switch wire connector, expand the plastic lugs to allow removal of the shell-wire connector from the switch body.**
2. Disconnect the brake hydraulic lines from the differential valve assembly.
3. Remove the screw retaining the pressure differential valve assembly to the frame side rail and remove the valve assembly.
4. **If the differential valve is to be replaced, remove the brake warning lamp switch and install the switch in the new differential valve. The pressure differential valve assembly and the brake warning lamp switch are separate units and each is serviced as a separate assembly only.**

INSTALLATION

1. Mount the pressure differential valve assembly on the frame side rail and tighten the attaching screw.
2. Connect the brake hydraulic system lines to the differential valve assembly and tighten the tube nuts securely.
3. Connect the shell-wire connector to the brake warning lamp switch. **Make sure the plastic lugs on the connector hold the connector securely to the switch.**
4. Bleed the brakes and centralize the pressure differential valve as outlined in this Section of the manual.

BRAKE PEDAL ASSEMBLY

F-100-350-SERIES

Removal

Refer to Figure 28.

1. Working inside the vehicle, below the instrument panel, disconnect the wires from the stop light switch.
2. Disconnect the clutch pedal retracting spring and remove the insulators. Remove the retaining nut, shoulder bolt, and bushing securing the push rod to the brake pedal assembly.
3. On an automatic transmission equipped vehicle, remove the retainer, washer, bushings and shaft securing the brake pedal to the support. Remove the brake pedal assembly.
4. On a standard transmission equipped vehicle, remove the cotter pin, nut, washer, bushings and lever securing the brake pedal assembly to the support. Remove the brake pedal assembly.
5. Remove the stop light switch from the bracket on the brake pedal.
6. If required, remove the pedal pad.

Installation

1. If required, install the pedal pad on the brake pedal assembly.
2. Install the stop light switch retainer and the stop light switch in the retainer on the brake pedal.
3. On a standard transmission equipped vehicle, lubricate the bushings with lubricant (Lubriplate).

Insert the bushings in the brake pedal assembly, and install the brake pedal on the shaft. Install the bushings, lever, washer, nut and cotter pin on the shafts.

Install the bushing in the lever. Connect the rod to the lever and install the cotter pin.

4. On an automatic transmission equipped vehicle, lubricate the bushings with lubricant (Lubriplate).

Insert the bushings in the brake pedal assembly. Position the bushing on the shaft. Insert the shaft through the support and the pedal assembly.

Insert the outer bushing on the shaft and install the washer and retainer.

5. Lubricate the push rod bushing with lubricant. (Lubriplate). Position the bushing on the push rod.
6. Install the shoulder bolt. Secure the push rod to the brake pedal assembly with the self-locking nut.
7. Connect the wire to the stop light switch.
8. Install the clutch pedal retracting spring insulators and the spr

BRONCO

Removal

Refer to Figure 29.

1. Disconnect the wires stop light switch.
2. Remove the hair pin retainer (Fig. 29) and slide the stop light switch off the brake pedal pin just far enough for the switch outer hole to clear the pin. Remove the stop light switch from the pin.
3. Slide the master cylinder push rod off the brake pedal pin. Remove the bushing and washers.
4. Remove the cotter pin from the right side of the brake and clutch pedal shaft.
5. Slide the shaft toward the left, just enough to allow removal of the brake pedal and two brake pedal bushings.

Installation

1. Coat the brake pedal bushings and the shaft with lubricant (Rotunda Engine Oil SEA 10W-20W-30).
2. Position the bushings, pedal and shaft on the brake pedal support and install the retaining cotter pin (Fig. 29). Spread the cotter pin ends.
3. Lubricate the master cylinder push rod bushing with the lubricant. Insert the bushing in the push rod. Coat the washers with the lubricant, and position the push rod and bushing, washers and stop light switch on the brake pedal pin. Install the hair pin type retainer.
4. Connect the wires to the stop light switch.

ECONOLINE

Removal

Refer to Figure 30.

1. Remove the shoulder bolt and nut retaining the master cylinder push rod to the brake pedal.
2. On models with a manual transmission, remove the clutch lever from the clutch pedal shaft.

On models with an automatic transmission, remove the spring retainer and washer from the right end of the clutch pedal shaft.

3. Slide the shaft toward the left, just enough to allow removal of the brake pedal and two brake pedal bushings.

Buy Now
VISA DISCOVER AMEX PayPal