Buy Now

VISA DISCOVER AMEX PayPal

Discover more ebooks!
Visit our website:
fordshopmanual.com

Ford
OFFICIAL LICENSED PRODUCT
License #2011747

1967 FORD TRUCK

DEMO

This DEMO contains only a few pages of the entire manual/product.

Not all Bookmarks work on the Demo, but they do on the full version.

Features:
- Searchable text
- Printable pages
- Bookmarked for easy navigation
- High Resolution images
- Zoom to see exact details
- Money back Guarantee
- Transfer to USB flash drive support

SHOP MANUAL

All Volumes - Complete Set

- Includes Maintenance and Lubrication Manual

Copyright © 2011, Forel Publishing Company, LLC, Woodbridge, Virginia

All Rights Reserved. No part of this book may be used or reproduced in any manner whatsoever without written permission of Forel Publishing Company, LLC. For information write to Forel Publishing Company, LLC, 3999 Peregrine Ridge Ct., Woodbridge, VA 22192

1967 Ford Truck Shop Manual
EAN: 978-1-60371-075-6
ISBN: 1-60371-075-2

Forel Publishing Company, LLC
3999 Peregrine Ridge Ct.
Woodbridge, VA 22192

This publication contains material that is reproduced and distributed under a license from Ford Motor Company. No further reproduction or distribution of the Ford Motor Company material is allowed without the express written permission of Ford Motor Company.

Note from the Publisher

This product was created from the original Ford Motor Company's publication. Every effort has been made to use the original scanned images, however, due to the condition of the material; some pages have been modified to remove imperfections.

Disclaimer

Although every effort was made to ensure the accuracy of this book, no representations or warranties of any kind are made concerning the accuracy, completeness or suitability of the information, either expressed or implied. As a result, the information contained within this book should be used as general information only. The author and Forel Publishing Company, LLC shall have neither liability nor responsibility to any person or entity with respect to any loss or damage caused, or alleged to be caused, directly or indirectly by the information contained in this book. Further, the publisher and author are not engaged in rendering legal or other professional services. If legal, mechanical, electrical, or other expert assistance is required, the services of a competent professional should be sought.

1967 FORD TRUCK

SHOP MANUAL

VOLUME ONE

- VEHICLE IDENTIFICATION
- BRAKES
- SUSPENSION, STEERING, WHEELS AND TIRES
- REAR AXLE
- DRIVE SHAFT AND CLUTCH
- MANUAL SHIFT TRANSMISSION
- AUTOMATIC TRANSMISSION

1967 FORD TRUCK

SHOP MANUAL

VOLUME ONE

GROUP INDEX

VEHICLE IDENTIFICATION 1

BRAKES 2

SUSPENSION, STEERING, WHEELS AND TIRES 3

REAR AXLE 4

DRIVE SHAFT AND CLUTCH 5

MANUAL SHIFT TRANSMISSION 6

AUTOMATIC TRANSMISSION 7

VOLUME TWO

ENGINE 8

IGNITION SYSTEM 9

FUEL SYSTEM 10

COOLING SYSTEM 11

EXHAUST SYSTEM 12

VOLUME THREE

CHARGING SYSTEM 13

STARTING SYSTEM 14

LIGHTING SYSTEM, HORNS AND INSTRUMENTS 15

VENTILATING, HEATING AND ACCESSORIES 16

BODY, DOORS AND WINDOWS 17

TRIM AND SEATS 18

SPECIFICATIONS AND SPECIAL SERVICE TOOLS AT END OF EACH GROUP

Ford SERVICE PUBLICATIONS

FIRST PRINTING—APRIL, 1967

© 1967 FORD MOTOR COMPANY, DEARBORN, MICHIGAN

FOREWORD

The three volumes of this shop manual provide the Service Technician with complete information for the proper servicing of all 1967 Ford Trucks except Econoline and Ranchero.

The maintenance schedule and procedures for maintenance operations are published in the 1967 Truck Maintenance and Lubrication Manual.

The information is grouped according to the type of work being performed, such as diagnosis and testing, frequently performed adjustments and repairs, in-vehicle adjustments, overhaul, etc. Specifications, maintenance information and recommended special tools are included.

Refer to the opposite page for important vehicle identification data.

The descriptions and specifications in this manual were in effect at the time this manual was approved for printing. Ford Motor Company reserves the right to discontinue models at any time, or change specifications or design, without notice and without incurring obligation.

Ford **SERVICE PUBLICATIONS**

Vehicle Identification

GROUP 1

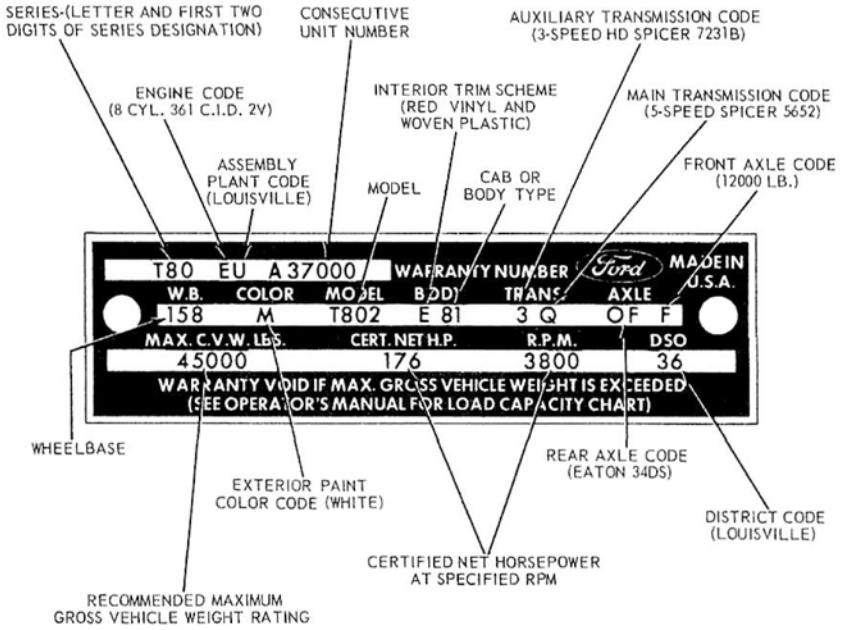

FIG. 1—Typical Truck Rating Plate

RATING PLATE

Figure 1 illustrates a typical truck Rating Plate. The Rating Plate is riveted to the rear (lock) face of the left front door on Conventional Cabs, 89 inch BBC (bumper-to-back of cab) and Tilt Cab Trucks. On cowl and windshield units, the Rating Plate is mounted on the upper cowl panel in the engine compartment.

The Official Serial Number, for title and registration purposes, is stamped on the following locations: P-Series—right frame side rail approximately 4 inches to rear of the front crossmember; N, NT, F, T and B-Series—right frame side rail approximately 24 inches forward of the No. 2 crossmember; C-Series —10 inches forward of the rear cab support on the upper flange of the right frame side rail.

Do not use the Warranty Number which appears on the Rating Plate for title or registration purposes.

VEHICLE WARRANTY NUMBER

The Warranty Number is the first line of numbers and letters appearing on the Rating Plate (Fig. 1). The first letter and two numbers indicate the truck model and series (the letter prefix identifies the type of body or cab and the numbers are the first two numbers of a truck series). The letter following the truck series code designates the engine identification code. The letter following the engine identification code indicates the assembly plant at which the vehicle was built. The remaining numbers indicate the consecutive unit number. The charts that follow list the various vehicle warranty number codes.

VEHICLE DATA

The Vehicle Data appears on the Rating Plate on the two lines following the Warranty Number. The first three digits under W.B. designate the wheelbase in inches. The one or two letters under COLOR identify the exterior paint color (two letters designate a two-tone). The letter and three digits under MODEL designate the truck model within a series. The letter and numerals under BODY designate the interior trim and body type (the letter identifies the interior trim scheme and the numerals identify the body or cab type). The transmission installed in the vehicle is identified under TRANS by either a numeric or alphabetical code (if two symbols appear, the first identifies the auxiliary transmission, if so equipped, and the second symbol identifies the main transmission). A letter and a number or two numbers under AXLE identify the rear axle ratio (when required, a letter is also stamped behind the rear axle code to identify the front axle capacity). The maximum gross vehicle weight in pounds is stamped under MAX. G.V.W. Following MAX. G.V.W., the horsepower rating of the engine with which the vehicle is equipped, is stamped under CERT. NET H.P. and the rpm required to develop the given horsepower is stamped under R.P.M. A two-digit number is stamped under D.S.O. to identify the district which ordered the vehicle. If the vehicle is built to special order (Domestic Special Order, Foreign Special Order, Limited Production Option, or other special order), the complete order number will also appear under D.S.O. The charts that follow list the various vehicle data codes.

W.B. (Wheelbase)

The wheelbase in inches is entered in this space.

MAX. G.V.W. Lbs.

The maximum gross vehicle weight in pounds is recorded in this space.

CERT. Net H.P. R.P.M.

The certified net horsepower at specified rpm is marked at this location.

D.S.O.

If vehicle is built on a D.S.O., F.S.O., L.P.O. (special orders) the complete order number will be reflected under the DSO space including the District Code Number.

ASSEMBLY PLANT CODES

Code Letter	Assembly Plant	Code Letter	Assembly Plant
C	Ontario	N	Norfolk
D	Dallas	P	Twin Cities
E	Mawah	R	San Jose
H	Lorain	S	Pilot Plant
K	Kansas City	U	Louisville
L	Michigan Truck		

MODEL CODE PREFIX

Prefix	Type
B	School Bus Chassis–Gas
C	Tilt Cab 2 Axle–Gas
D	Tilt Cab 2 Axle–Diesel
F	Conventional 2 Axle–Gas
K	Conventional 2 Axle–Diesel
L	Tilt Cab Tandem Rear Axle–Gas
N	89" BBC Conventional 2 Axle–Gas
P	Parcel Delivery
Q	Tilt Cab Tandem–Diesel
R	89" BBC Conventional 2 Axle–Diesel
S	89" BBS Conventional Tandem Rear Axle–Gas
T	Conventional Tandem Rear Axle–Gas
U	Conventional Tandem Rear Axle–Diesel
V	School Bus Chassis–Diesel
W	89" Conventional Tandem Rear Axle–Diesel
X	Fwd. Axle Tilt Cab Tandem Rear Axle–Diesel
Z	Fwd. Axle Tilt Cab 2 Axle–Diesel

INTERIOR TRIM CODES

Code	Trim Scheme
1	Gray Vinyl
2	Med. Blue Vinyl
3	Med. Green Vinyl
4	Med. Beige Vinyl
5	Red Vinyl
B	Med. Blue Woven Plastic and Med. Blue Crush Vinyl
C	Med. Green Woven Plastic and Med. Green Crush Vinyl
D	Med. Beige Woven Plastic and Med. Crush Beige Vinyl
E	Red Woven Plastic and Red Crush Vinyl
F	Med. Blue Barcelona and Dk. Blue Crinkle Vinyl
G	Med. Green Barcelona and Dk. Green Crinkle Vinyl
H	Lt. Parchment Barcelona and Pastel Parchment Crinkle Vinyl
I	Red Barcelona and Dk. Red Crinkle Vinyl
J	F-6000 Diesel–H.D. Black Leather Grain Vinyl C-550 thru 1000 and CT-750 thru 950–Gray Blockweave and Silver Gray Crush Vinyl
K	Med. Blue Woven Plastic and Med. Blue Crush Vinyl
L	Med. Green Woven Plastic and Med. Green Crush Vinyl
M	Med. Beige Woven Plastic and Med. Beige Crush Vinyl
N	Red Woven Plastic and Red Crush Vinyl
O	Dk. Blue Rosette and Crinkle Vinyl
P	Dk. Green Rosette and Crinkle Vinyl
Q	Pastel Parchment Rosette and Crinkle Vinyl
R	Dk. Red Rosette and Crinkle Vinyl
S	Dk. Blue Rosette and Crush Vinyl
T	Dk. Green Rosette and Crush Vinyl
U	Pastel Parchment Rosette and Crush Vinyl
V	Red Rosette and Crush Vinyl
W	Dk. Blue Rosette and Crush Vinyl
X	Dk. Green Rosette and Crush Vinyl
Y	Pastel Parchment Rosette and Crush Vinyl
Z	Dk. Red Rosette and Crush Vinyl

EXTERIOR PAINT COLOR CODES

Code	M-30J/M-32J ① Spec. Number	Color
A	1724-A	Black
B	1734-A	Lt. Aqua
C	1525-A	White
F	1226-A	Lt. Blue
G	1526-A	Chrome Yellow
J	1515-A	Red
L	1237-A	Dark Green
M	1619-A	White
U	2097-A	Med. Green
3	1623-A	Light Blue
6	1631-A	Lt. Beige
7	2098-A	Dk. Blue
8	1955-A	Yellow

① M-32J Acrylic Enamel Alternate with M-30J Alkyd.
NOTE: Asterisk (*) preceding color code identifies units painted with alkyd enamel.

DISTRICT CODES

Code	District	Code	District
11	Boston	51	Denver
13	New York	52	Des Moines
15	Newark	53	Kansas City
16	Philadelphia	54	Omaha
17	Washington	55	St. Louis
21	Atlanta	61	Dallas
22	Charlotte	62	Houston
24	Jacksonville	63	Memphis
25	Richmond	64	New Orleans
27	Cincinnati	65	Oklahoma City
28	Louisville	71	Los Angeles
32	Cleveland	72	San Jose
33	Detroit	73	Salt Lake City
34	Indianapolis	74	Seattle
35	Lansing	75	Phoenix
37	Buffalo	81	Ford of Canada
38	Pittsburgh	83	Government
41	Chicago	84	Home Office Reserve
42	Fargo	85	American Red Cross
43	Milwaukee	89	Transportation
44	Twin Cities	90's	Export
45	Davenport		

The uniform sequential serial and numbering system for the 1967 model truck program is as follows:

1966 (calendar year)

Aug.–1966 Model	900,000 thru 913,999
Aug.–1967 Model	A00,000 thru A13,999
Sept.	A14,000 thru A27,999
Oct.	A28,000 thru A41,999
Nov.	A42,000 thru A55,999
Dec.	A56,000 thru A69,999

1967 (calendar year)

Jan.	A70,000 thru A83,999
Feb.	A84,000 thru A97,999
Mar.	A98,000 thru B11,999
Apr.	B12,000 thru B25,999
May	B26,000 thru B39,999
June	B40,000 thru B53,999
July	B54,000 thru B67,999
Aug.	B68,000 thru B81,999

AUXILIARY TRANSMISSION CODES

Code ①	Type	Ratio
1	3 Speed Spicer 5831-C	1.27 / .85
2	3 Speed Spicer 5831-D	2.0 / .85
3	3 Speed H. D. Spicer 7231-B	1.24 / .86
4	3 Speed H. D. Spicer 7231-D	2.14 / .86
5	4 Speed Spicer 8341-C	2.40 /1.29 /.84
6	3 Speed Spicer 8031-C	2.59 / .79
7	3 Speed Spicer 8031-P	1.19 / .84
8	4 Speed Spicer 7041	2.31 /1.21 /.83
9	3 Speed Fuller 3D65	2.221/ .804
A	3 Speed Fuller 3J65	1.17 / .86
B	3 Speed Fuller 4C75	2.22 /1.18 /.85

NOTE: When required, the auxiliary transmission code will be stamped directly in front of the transmission code.

① If the "New Process" transmission is installed, the auxiliary transmission code will bear the suffix "N".

GASOLINE ENGINE CODES

Code	Engine
A	6 Cyl. 240 CID 1V
B	6 Cyl. 300 CID 1V LD
B	6 Cyl. 300 CID 1V HD
C	8 Cyl. 330 CID 2V MD
D	8 Cyl. 330 CID 2V HD
E	8 Cyl. 361 CID 2V
F	6 Cyl. 170 CID 1V
F	8 Cyl. 391 CID 4V
H	8 Cyl. 401 CID 4V
K	8 Cyl. 477 CID 4V
L	8 Cyl. 534 CID 4V
U	8 Cyl. 330 CID 2V ①
W	8 Cyl. 361 CID 2V ①
Y	8 Cyl. 352 CID 2V
1	6 Cyl. 240 CID 1V ②
2	6 Cyl. 300 CID 1V ②
3	8 Cyl. 330 CID 2V MD ②
4	8 Cyl. 330 CID 2V HD ②
5	8 Cyl. 361 CID 2V ②
6	6 Cyl. 170 CID 1V ②
8	8 Cyl. 352 CID 2V ②
9	8 Cyl. 534 CID 4V ①

① Low propane gas
② Low compression

TRANSMISSION CODES -100 -600 SERIES

Code	Description
A	4-Speed New Process
B	3-Speed O/Drive
C	3-Speed Ford L. D.
D	3-Speed Warner M. D.
E	3-Speed Warner H. D.
F	4-Speed Syn. Warner
G	Automatic (C-4)
J	5-Speed Clark 264-VO O/Drive
L	5-Speed Clark 2653-V1 Dir.
M	5-Speed Clark 250-V Dir.
O	5-Speed New Process 541 FL
P	5-Speed New Process 541 FO
R	5-Speed Clark 2622 V1 Dir.
V	5-Speed Clark 251-VO O/Drive

TRANSMISSION CODES—700-1000-N500-N600-NC550-C600 SERIES

Code	Description
A	4-Speed New Process 435
A	5-Speed Spicer 8052 Direct ①
B	10-Speed Fuller R-96 Direct
F	5-Speed Fuller 5H74 Direct
G	5-Speed Fuller 5H75 Direct
H	5-Speed Clark 305V Direct
I	5-Speed Clark 307V Direct
J	5-Speed Clark 264VO O/Drive
K	5-Speed Clark 6453A O/Drive
L	5-Speed Clark 2653V1 Direct
M	5-Speed Clark 250V Direct
M	5-Speed Spicer 6452A O/Drive ①
N	5-Speed Spicer 6352 Direct
O	5-Speed New Process 541FL Direct
O	5-Speed Fuller T905B Direct ①
P	5-Speed New Process 541FO O/Drive
P	5-Speed Spicer 8051C O/Drive ①
Q	5-Speed Spicer 5652 Direct
R	5-Speed Clark 2622V1 Direct
S	5-Speed Spicer 5756B Direct
T	8-Speed Fuller R46 Direct
U	5-Speed Spicer 6852G Direct
V	5-Speed Clark 251 VO O/Drive
V	10-Speed Fuller RT910 Direct ①
W	5-Speed Spicer 6352B Direct
X	6-Speed Allison MT30 Transmatic
X	5-Speed Fuller T905A Direct ①
Y	6-Speed Allison MT40 Transmatic
Y	6-Speed Allison MT41 Transmatic ①
Z	DSO Transmission
1	6-Speed Allison MT42 Transmatic
2	5-Speed Spicer 6354 Direct ①
3	5-Speed Spicer 5852 Direct ①
4	12-Speed Spicer 8125 O/Drive ①
5	10-Speed Fuller RTO 910 O/Drive ①
6	15-Speed Fuller RTO 915 O/Drive ①
7	5-Speed Fuller 5HA74 Direct ①
8	12-Speed Spicer 8312 O/Drive ①
9	15-Speed Fuller RT915 Direct ①

① With Diesel engines.

FRONT AXLE CODES

Code	Capacity
B	5.5M ①
C	6M ①
D	7M ①
E	9M ①
F	12M ①
G	12M ①
H	15M ①
I	18M ①
K	3.5M ①
L	6M ① ②
M	Heavy Duty Front Brakes
N	9M ① ②

① Pounds Capacity in Thousands.
② Heavy Duty Front Brakes.

DIESEL ENGINE CODES

Code	Engine
A	855 Cummins NHC 250 (213 HP)
B	588 Cummins V6E 195
C	743 Cummins NHE 180
D	743 Cummins NHE 195
E	743 Cummins NH 220
F	785 Cummins V8E 235
G	785 Cummins V8265
H	855 Cummins NHC 250 (213 HP)
J	855 Cummins NHC 250 (234 HP)
J	242 Dorset
K	1673 Caterpillar
L	1673 B Caterpillar
M	855 Cummins NTC 260
N	855 Cummins NTC 280
P	855 Cummins NTC 300
Q	855 Cummins NTC 320
R	855 Cummins NTC 335
S	Detroit 6-71A
T	Detroit 8V-71N
U	401 Cummins JN130
V	401 Cummins JNF130
W	363 Dorset
X	464 Cummins CF 160
Y	464 Cummins C 180
Z	464 Cummins C 160
2	Detroit 6-71N
6	Detroit 8V-71N
7	Detroit 8V-71NE
8	Detroit 6V-53N
9	Detroit 6-71NE

BODY CODES

Code	Body Type
81	Conventional Cab
84	Cowl and Chassis
85	Cowl and Windshield
91	Tilt Cab

REAR AXLE CODES 100 -750 and P-SERIES

Code	Ratio and Rating	Code	Ratio and Rating	Code	Ratio and Rating
05 Ford	4.11–3.3M ①	38 Dana #60	3.73–5.2M ①	C1 Dana #44	3.31–3.3M ①
08 Ford	3.50–3.3M ①	41 Rockwell D-100W	5.83–13M ①	C2 Dana #44	3.73–3.3M ①
09 Ford	3.70–3.3M ①	42 Rockwell D-100N	6.20–13M ①	C4 Dana #44	4.09–3.3M ①
17 Ford	3.25–3.3M ①	44 Rockwell D-100N	6.80–13M ①	C5 Dana #60-2	4.10–3.3M ①
22 Dana #70	4.88–7.4M ①	62 Rockwell F-106	6.20–15M ①	C8 Dana #60	3.73–5.2M ①
23 Dana #70	5.13–7.4M ①	64 Rockwell F-106	6.80–15M ①	D2 Dana #70	4.88–7.4M ① ②
24 Dana #60	4.10–5.2M ①	66 Rockwell F-106	7.20–15M ①	D7 Dana #70	4.10–7.4M ① ②
25 Dana #60	4.56–5.2M ①	71 Rockwell H-140	5.83–17M ①	D8 Dana #70	4.56–7.4M ① ②
26 Dana #60	4.88–5.2M ①	74 Rockwell H-140	6.80–17M ①	E5 Dana #60-3	4.10–3.6M ① ②
27 Dana #70	4.10–7.4M ①	76 Rockwell H-140	7.20–17M ①	E9 Dana #60-3	3.54–3.6M ① ②
28 Dana #70	4.56–7.4M ①	A8 Dana #44	3.54–3.3M ①	F7 Eaton 13802	5.83/8.11–15M ①
29 Dana #70	5.87–7.4M ①	A9 Dana #60-2	3.54–3.3M ①	F8 Eaton 13802	6.33/8.81–15M ①
30 Rockwell C-100	5.29–11M ①	B4 Dana #60	4.10–5.2M ①	G2 Rockwell H140	5.57/7.75–17M ①
32 Rockwell C-100	6.20–11M ①	B5 Dana #60	4.56–5.2M ①	G3 Rockwell H140	6.50/9.04–17M ①
34 Rockwell C-100	6.80–11M ①	B6 Dana #60	4.88–5.2M ①		

① Pounds Capacity in Thousands. ② Locking.

REAR AXLE CODES -700 -1000 SERIES

EATON 34 DP

Code	Ratio and Rating
1N	5.05–34M ①
2N	5.60–34M ①
3N	5.91–34M ①
4N	6.21–34M ①
5N	6.65–34M ①
6N	7.60–34M ①
7N	8.38–34M ①

EATON 34 DS

1F	4.11–34M ①
2F	4.33–34M ①
3F	4.56–34M ①
4F	4.88–34M ①
5F	5.29–34M ①
6F	5.57–34M ①
7F	6.14–34M ①
8F	6.50–34M ①
9F	7.17–34M ①
0F	7.60–34M ①
AF	3.70–34M ①

EATON 34 M

1E	4.56–34M ①
2E	5.85–34M ①
3E	6.69–34M ①
4E	7.80–34M ①
5E	8.60–34M ①

EATON 34 DTA

1W	4.11/5.61–34M ①
2W	4.33/5.91 –34M ①
3W	4.56/6.21–34M ①
4W	4.88/6.65–34M ①
5W	5.57/7.60–34M ①
6W	6.14/8.38–34M ①
7W	6.50/8.87–34M ①
8W	7.17/9.77–34M ①
9W	3.70/5.05–34M ①
0W	5.29/7.21 –34M ①

EATON 30 D-3

3S	4.63/5.53/6.43–32M ①
4S	4.88/5.83/6.77–32M ①
5S	5.57/6.66/7.75–32M ①
6S	6.14/7.35/8.55–32M ①
7S	6.50/7.77/9.04–32M ①

EATON 34 D-3

1T	5.11/4.86/5.61–34M ①
2T	4.33/5.12/5.91–34M ①
3T	4.56/5.39/6.21–34M ①
4T	4.88/5.76/6.65–34M ①
5T	5.57/6.59/7.60–34M ①
6T	6.14/7.25/8.87–34M ①
7T	6.14/7.26/8.38–34M ①
8T	3.70/4.37/5.07–34M ①
9T	5.29/6.25/7.21–34M ①

EATON 38 D-3

Code	Ratio and Rating
1Z	4.11/4.86/5.61–38M ①
2Z	4.33/5.12/5.91–38M ①
3Z	4.56/5.39/6.21–38M ①
4Z	4.88/5.76/6.65–38M ①
5Z	5.57/6.59/7.60–38M ①
6Z	6.14/7.26/8.38–38M ①
7Z	6.50/7.68/8.87–38M ①

EATON 38 DS

11	4.56–38M ①
21	4.88–38M ①
31	5.57–38M ①
41	6.14–38M ①
51	6.50–38M ①
61	4.11–38M ①
71	4.33–38M ①
81	5.29–38M ①

EATON 42 DP

1V	7.60–44M ①
2V	8.38–44M ①

EATON 38 DP

1R	5.05–38M ①
2R	5.60–38M ①
3R	5.91–38M ①
4R	6.21–38M ①
5R	6.65–38M ①
6R	7.60–38M ①
7R	8.38–38M ①

EATON 22M

1A	6.70–22M ①
2A	7.79–22M ①

EATON 1790–A–91A

1Q	4.33–18.5M ①
2Q	4.56–18.5M ①
3Q	4.88–18.5M ①
4Q	5.29–18.5M ①
5Q	5.57–18.5M ①
6Q	6.14–18.5M ①
7Q	6.50–18.5M ①
8Q	7.17–18.5M ①
9Q	7.67–18.5M ①

EATON 17800

1H	4.33/5.91–18.5M ①
2H	4.56/6.21–18.5M ①
3H	4.88/6.65–18.5M ①
4H	5.29/7.21–18.5M ①
5H	5.57/7.60–18.5M ①
6H	6.14/8.38–18.5M ①
7H	6.50/8.87–18.5M ①
8H	7.17/9.77–18.5M ①

EATON 1880

Code	Ratio and Rating
1K	4.88–22M ①
2K	5.57–22M ①
3K	6.14–22M ①
4K	6.50–22M ①
5K	7.17–22M ①
6K	5.29–22M ①

EATON 18802

1B	4.33/5.91–22M ①
2B	4.56/6.21–22M ①
3B	4.88/6.65–22M ①
4B	5.57/7.60–22M ①
5B	6.14/8.38–22M ①
6B	6.50/8.87–22M ①
7B	7.17/9.77–22M ①
8B	5.29/7.21–22M ①

EATON 1918

1G	4.11–23M ①
2G	4.33–23M ①
3G	4.88–23M ①
4G	5.43–23M ①
5G	6.17–23M ①
6G	6.67–23M ①
7G	3.70–23M ①
8G	4.56–23M ①

EATON 19800

1P	4.33/5.89–23M ①
2P	4.88/6.63–23M ①
3P	5.43/7.39–23M ①
4P	6.17/8.40–23M ①
5P	6.67/9.08–23M ①
6P	3.70/5.04–23M ①
7P	4.11/5.60–23M ①
8P	4.56/6.21–23M ①

EATON 9502

1X	5.90–23M ①
2X	6.64–23M ①

EATON 8802

1J	5.91–22M ①
2J	6.21–22M ①
3J	6.65–22M ①

EATON 30 DP

1D	6.43–32M ①
2D	6.78–32M ①
3D	7.75–32M ①
4D	8.55–32M ①

① Pounds Capacity in Thousands.

REAR AXLE CODES -700 -1000 SERIES (Cont'd.)

EATON 30 DS

Code	Ratio and Rating
1C	4.62–32M ①
2C	4.88–32M ①
3C	5.57–32M ①
4C	6.14–32M ①
5C	6.50–32M ①
6C	7.17–32M ①
7C	7.60–32M ①
8C	6.43–32M ①

EATON 30 DTA

1L	4.62/6.43–32M ①
2L	4.88/6.77–32M ①
3L	5.57/7.75–32M ①
4L	6.14/8.54–32M ①
5L	6.50/9.04–32M ①
6L	7.17/9.77–32M ①

EATON 13802

F7	5.83/8.11–15M ①
F8	6.33/8.81–15M ①

EATON 1614-15

72	5.57–17M ①
73	6.50–17M ①
75	7.17–17M ①

EATON 16802-3

G2	5.57/7.75–17M ①
G3	6.50/9.04–17M ①

ROCKWELL Q246

L1	4.92–22M ①
L2	5.63–22M ①
L3	6.04–22M ①
L4	6.39–22M ①
L5	7.27–22M ①

ROCKWELL Q346

T1	4.92/6.76–22M ①
T2	5.63/7.73–22M ①
T3	6.00/8.24–22M ①
T4	6.39/8.78–22M ①
T5	7.33/10.07–22M ①

ROCKWELL RT 241

P1	4.62–23M ①
P2	4.99–23M ①
P3	5.46–23M ①
P4	6.10–23M ①
P5	7.21–23M ①

ROCKWELL RT-341

X1	4.68/5.88–23M ①
X2	5.06/6.35–23M ①
X3	5.34/6.71–23M ①
X4	6.18/7.76–23M ①
X5	7.01/8.80–23M ①

ROCKWELL R-202

Code	Ratio and Rating
1	4.41–23M ①
2	4.77–23M ①
3	5.54–23M ①
4	6.26–23M ①
5	7.09–23M ①

ROCKWELL R-302

Y1	4.41/5.64–23M ①
Y2	4.89/6.23–23M ①
Y3	5.54/7.09–23M ①
Y4	6.42/8.38–23M ①
Y5	7.09/9.07–23M ①

ROCKWELL SLDD

N1	4.88–34M ①
N2	5.09–34M ①
N3	5.56–34M ①
N4	5.90–34M ①
N5	6.41–34M ①
N6	7.67–34M ①
N7	8.44–34M ①
N8	6.70–34M ①

ROCKWELL C-100

32	6.20–11M ①
34	6.80–11M ①

ROCKWELL D-100

41	5.83–13M ①
42	6.20–13M ①
44	6.80–13M ①

ROCKWELL F-106

62	6.20–15M ①
64	6.80–15M ①
66	7.20–15M ①

ROCKWELL H-140

71	5.83–17M ①
74	6.80–17M ①
76	7.20–17M ①
77	4.63–17M ①
78	5.29–17M ①
79	6.17–17M ①

ROCKWELL SRDD

V1	7.54–44M ①
V2	8.31–44M ①

ROCKWELL SUDD

A1	7.98–50M ①
A2	9.00–50M ①

ROCKWELL SFDD

J1	8.07–60M ①
J2	9.03–60M ①
J3	10.16–60M ①

ROCKWELL SLHD

Code	Ratio and Rating
B1	4.11–34M ①
B2	4.44–34M ①
B3	4.63–34M ①
B4	4.88–34M ①
B5	5.29–34M ①
B6	5.83–34M ①
B7	6.17–34M ①
B8	6.83–34M ①
B9	7.80–34M ①
B0	8.60–34M ①
BA	3.55–34M ①

ROCKWELL H340

81	5.41/7.44–17M ①
82	6.16/8.48–17M ①

ROCKWELL SQHD

D1	4.11–38M ①
D2	4.44–38M ①
D3	4.63–38M ①
D4	5.91–38M ①
D5	5.83–38M ①
D6	6.83–38M ①
D7	7.80–38M ①
D8	8.60–38M ①
D9	3.55–38M ①
D0	4.88–38M ①
DA	6.17–38M ①

ROCKWELL SQHD (w/Lt. Wt. Susp.)

M1	4.11–38M ①
M2	4.44–38M ①
M3	4.63–38M ①
M4	5.29–38M ①
M5	5.83–38M ①
M6	6.83–38M ①
M7	7.80–38M ①
M8	8.60–38M ①
M9	3.55–38M ①
M0	4.88–38M ①
MA	6.17–38M ①

ROCKWELL SQDD

Z1	7.54–38M ①
Z2	8.31–38M ①

ROCKWELL R-171

H1	4.11–23M ①
H2	4.33–23M ①
H3	4.63–23M ①
H4	4.88–23M ①
H5	5.29–23M ①
H6	5.86–23M ①
H7	6.14–23M ①
H8	6.83–23M ①
H9	3.70–23M ①

① Pounds Capacity in Thousands.

REAR AXLE CODES -700 -1000 SERIES (Cont'd.)

ROCKWELL SLHD (w/Lt. Wt. Susp.)	
Code	Ratio and Rating
K1	4.11–34M ①
K2	4.44–34M ①
K3	4.63–34M ①
K4	4.88–34M ①
K5	5.29–34M ①
K6	5.83–34M ①
K7	6.17–34M ①
K8	6.83–34M ①
K9	7.80–34M ①
K0	8.60–34M ①
KA	3.55–34M ①

ROCKWELL L-346	
Code	Ratio and Rating
Q1	4.96/6.76–18.5M ①
Q2	5.63/7.73–18.5M ①
Q3	6.00/8.24–18.5M ①
Q4	6.39/8.78–18.5M ①
Q5	6.65/9.13–18.5M ①
Q6	7.10/9.76–18.5M ①

ROCKWELL SHHD	
Code	Ratio and Rating
W1	5.29–30M ①
W2	5.83–30M ①
W3	6.17–30M ①
W4	6.80–30M ①
W5	7.20–30M ①
W6	7.80–30M ①

① Pounds Capacity in Thousands.

SERIES, MODEL CODES, AND GROSS VEHICLE WEIGHTS (G.V.W.)—850 -1000 SERIES

Series	Model Code	Rating G V W (lbs)	Nominal (ton)
F-850	F-850	25,000	3
	F-851	20,000	2
	F-852	25,000	3
	F-853	27,000	3½
	F-854	27,000	3½
	F-855	27,000	3½
	F-856	25,500	3
	F-857	27,500	3½
	F-858	25,500	3
	F-859	32,000	4½
F-950	F-950	28,000	3½
	F-951	24,000	2½
	F-952	30,000	4
	F-953	30,000	4
	F-954	32,000	4½
	F-955	32,000	4½
	F-956	34,000	5
	F-957	29,000	3½
	F-958	31,000	4
	F-959	33,000	4½
CT-850	L-850	39,000	3½
	L-851	27,000	2½
	L-852	41,000	4
	L-853	43,000	4
	L-854	45,000	4
	L-855	49,000	5
CT-950	L-950	47,000	5
	L-951	30,000	3½
	L-952	49,000	5
	L-953	51,000	6
N-850	N-850	25,000	3
	N-851	20,000	2
	N-852	25,000	3
	N-853	27,000	3½
	N-854	27,000	3½
	N-855	27,000	3½
	N-856	25,000	3
	N-857	27,500	3½
	N-858	25,500	3
*F-1000-D	K-000	32,000	4½
	K-001	26,000	3
	K-002	34,000	5
	K-003	36,000	5
N-1000	N-000	32,000	4½
	N-001	26,000	3
	N-002	34,000	5
	N-003	36,000	5

Series	Model Code	Rating G V W (lbs)	Nominal (ton)
F-1000	F-000	32,000	4½
	F-001	26,000	3
	F-002	34,000	5
	F-003	36,000	5
C-850	C-850	27,000	3½
	C-851	20,000	2
	C-852	27,000	3½
	C-853	27,000	3½
	C-854	27,000	3½
	C-855	27,500	3½
	C-856	27,500	3½
*NT-850-D	W-850	43,000	4
	W-851	27,000	2½
	W-852	39,000	3½
	W-853	41,000	4
	W-854	45,000	4
	W-855	49,000	5
*T-850-D	U-850	39,000	3½
	U-851	27,000	2½
	U-852	41,000	4
	U-853	43,000	4
	U-854	45,000	4
	U-855	49,000	5
	U-856	51,000	6
*F-950-D	K-950	28,000	3½
	K-951	24,000	2½
	K-952	30,000	4
	K-953	30,000	4
	K-954	32,000	4½
	K-955	32,000	4½
	K-956	34,000	5
	K-957	29,000	3½
	K-958	31,000	4
	K-959	33,000	4½
	K-960	25,500	3
	K-961	27,500	3½
C-950	C-950	30,000	4
	C-951	24,000	2½
	C-952	30,000	4
	C-953	32,000	4½
	C-954	32,000	4½
	C-955	34,000	5
	C-956	34,000	5
	C-957	31,000	4
	C-958	33,000	4½
C-1000	C-000	32,000	4½
	C-001	26,000	3
	C-002	34,000	5
	C-003	36,000	5

Series	Model Code	Rating G V W (lbs)	Nominal (ton)
T-850	T-850	39,000	3½
	T-851	27,000	2½
	T-852	41,000	4
	T-853	43,000	4
	T-854	43,000	4
	T-855	45,000	4
	T-856	49,000	5
	T-857	43,000	4
	T-858	45,000	4
	T-859	51,000	6
T-950	T-950	47,000	5
	T-951	30,000	3½
	T-952	49,000	5
	T-953	53,000	6
	T-954	55,000	7
	T-955	59,000	8
	T-956	65,000	9
	T-957	75,000	10
	T-958	78,000	10
N-950	N-950	28,000	3½
	N-951	24,000	2½
	N-952	30,000	4
	N-953	30,000	4
	N-954	32,000	4½
	N-955	32,000	4½
	N-956	34,000	5
	N-957	29,000	3½
	N-958	31,000	4
	N-959	33,000	4½
NT-950	S-950	47,000	5
	S-951	30,000	3½
	S-952	49,000	5
	S-953	51,000	6
*N-1000-D	R-000	32,000	4½
	R-001	26,000	3
	R-002	34,000	5
	R-003	36,000	5
	R-004	27,500	3½
NT-850	S-850	39,000	3½
	S-851	27,000	2½
	S-852	41,000	4
	S-853	43,000	4
	S-854	43,000	4
	S-855	45,000	4
	S-856	49,000	5
	S-857	43,000	4
	S-858	45,000	4

SERIES, MODEL CODES, AND GROSS VEHICLE WEIGHTS (G.V.W.)—850 -1000 SERIES (Cont'd.)

Series	Model Code	Rating G V W (lbs)	Nominal (ton)
*NT-950-D	W-950	47,000	5
	W-951	30,000	3½
	W-952	49,000	5
	W-954	51,000	6
*T-950-D	U-950	47,000	5
	U-951	30,000	3½
	U-952	49,000	5
	U-953	53,000	6
	U-954	56,000	7
C-6000	D-600	20,000	2
	D-601	15,000	1½
	D-610	21,000	2½
	D-611	22,000	2½
	D-612	23,000	2½
	D-613	23,000	2½
	D-614	23,000	2½
B-7000	J-700	20,500	2½
	J-701	17,000	2
	J-702	21,000	2½
	J-703	22,500	2½
	J-704	23,000	2½
	J-705	24,000	2½
	J-706	25,500	3
	J-707**	23,000	2½
	J-708**	23,000	2½
	J-709	22,000	2½
C-7000	D-700	24,000	2½
	D-701	17,000	2
	D-702	25,500	3
	D-703	25,500	3
	D-704	25,500	3
F-7000	K-700	22,000	2½
	K-701	17,000	2
	K-702	23,000	2½
	K-703	24,000	2½
	K-704	25,500	3
	K-705**	23,000	2½
	K-706**	23,000	2½
	K-707**	25,500	3
F-8000	K-800	24,000	2½
	K-801	20,000	2
	K-802	25,500	3
	K-803	27,500	3½
	K-804	27,500	3½
	K-805	27,500	3½
	K-806	24,000	3½
	K-807	24,500	2½
T-8000	U-800	39,000	3½
	U-801	27,000	2½
	U-802	41,000	4
	U-803	43,000	4
	U-804	45,000	4
	U-805	49,000	5
	U-806	56,000	7
	U-807	62,000	9
CT-8000	Q-800	43,000	4
	Q-801	27,000	2½
	Q-802	39,000	3½
	Q-803	45,000	4
	Q-804	49,000	5
	Q-805	51,000	6
NT-8000	W-800	39,000	3½
	W-801	27,000	2½
	W-802	41,000	4
	W-803	43,000	4
	W-804	43,000	4
	W-805	45,000	4
	W-806	49,000	5
	W-807	43,000	4
	W-808	45,000	4
	W-809	51,000	6
*W-1000-D	Z-000	32,000	4½
	Z-001	26,000	3
	Z-002	34,000	5
	Z-003	36,000	5
*WT-1000-D	X-000	41,000	4
	X-001	32,000	3
	X-002	45,000	4
	X-003	49,000	5
N-6000	R-600	20,000	2
	R-601	15,000	1½
	R-610	21,000	2½
	R-611	22,000	2½
	R-612	23,000	2½
	R-613	23,000	2½
	R-614	23,000	2½
	R-615	24,000	2½
N-7000	R-700	22,000	2½
	R-701	17,000	2
	R-702	23,000	2½
	R-703	24,000	2½
	R-704	25,500	3
	R-705	23,000	2½
	R-706	23,000	2½
N-8000	R-800	25,000	3
	R-801	20,000	2
	R-802	25,000	3
	R-803	27,000	3½
	R-804	27,000	3½
	R-805	27,000	3½
	R-806	25,500	3
	R-807	27,500	3½
	R-808	25,500	3
	R-809	34,000	5
	R-810	28,000	3½
	R-811	29,000	3½
	R-812	30,000	4
	R-813	31,000	4
	R-814	32,000	4½
	R-815	32,000	4½
	R-816	33,000	4½

*Diesel Engines

** Reference Pennsylvania Registration Data

SERIES, MODEL CODES, AND GROSS VEHICLE WEIGHTS (G.V.W.)—100 -350 AND P SERIES

Series	Model Code	Rating G V W (lbs)	Nominal (ton)
F-100	F-100	5,000	½
	F-101	4,200	½
	F-102	5,000	½
F-100 (4x4)	F-110	5,600	½
	F-111	4,900	½
	F-112	5,600	½
F-250	F-250	7,500	¾
	F-251	4,800	½
	F-252	7,500	¾
	F-253	6,000	¾
	F-254	6,900	¾
	F-255	6,000	¾
	F-256	6,900	¾
F-250 (4x4)	F-260	6,800	¾
	F-261	4,900	½
	F-262	7,700	¾
	F-263	6,100	¾
	F-264	7,700	¾
F-350	F-350	10,000	1
	F-351	8,000	¾
	F-352	8,000	¾
P-100	P-100	4,300	½
	P-101	5,000	½
P-350	P-350	8,000	¾
	P-351	5,900	½
P-400	P-400	10,000	1
	P-401	7,700	¾
	P-402	8,000	¾
P-500	P-500	15,000	1½
	P-501	10,000	1
P-600	P-600	17,000	2
	P-601	15,000	1½
P-3500	G-350	8,000	¾
	G-351	5,900	½
P-4000	G-400	10,000	1
	G-401	7,700	¾
	G-402	8,000	¾
P-5000	G-500	15,000	1½
	G-501	10,000	1
P-6000	G-600	17,000	2
	G-601	15,000	1½

SERIES, MODEL CODES, AND GROSS VEHICLE WEIGHTS (G.V.W.)—500 -800 SERIES

Series	Model Code	Rating G V W (lbs)	Nominal (ton)
B-500	B-500	15,000	1½
	B-501	10,000	1
	B-502	16,000	1½
	B-503	17,000	2
	B-504	18,000	2
	B-505	20,000	2
B-600	B-600	19,500	2
	B-601	15,000	1½
	B-602	20,000	2
	B-610	21,000	2½
	B-611	22,000	2½
	B-612	23,000	2½
	B-613	24,000	2½
	B-614	19,700	1¾
B-700	B-700	20,500	2½
	B-701	17,000	2
	B-702	21,000	2½
	B-703	22,500	2½
	B-704	23,000	2½
	B-705	24,000	2½
	B-706	25,500	3
	B-707	23,000	2½
	B-708	23,000	2½
	B-709	22,000	2½
B-750	B-750	22,500	2½
	B-751	17,000	2
	B-752	23,000	2½
	B-753	24,000	2½
	B-754	25,500	3
	B-755	23,000	2½
	B-756	23,000	2½
C-550	C-550	15,000	1½
	C-551	10,000	1
	C-552	17,000	2
	C-553	19,000	2
	C-554	20,000	2
C-600	C-600	20,000	2
	C-601	15,000	1½
	C-610	21,000	2½
	C-611	23,000	2½
	C-612	23,000	2½
	C-613	23,000	2½
	C-614	23,000	2½
	C-615	19,700	1¾
C-700	C-700	24,000	2½
	C-701	17,000	2
	C-702	25,500	3
	C-703	25,500	3
	C-704	25,500	3
C-750	C-750	24,000	2½
	C-751	17,000	2
	C-752	25,500	3
	C-753	25,500	3
	C-754	25,500	3
	C-755	27,500	3½
	C-756	27,500	3½
C-800	C-800	27,000	3½
	C-801	20,000	2
	C-802	27,500	3½
	C-803	27,500	3½
	C-804	27,500	3½
	C-805	27,500	3½
	C-806	27,500	3½
CT-750	L-750	39,000	3½
	L-751	27,000	2½
	L-752	41,000	4
CT-800	L-800	43,000	4
	L-801	27,000	2½
	L-802	39,000	3½
	L-803	45,000	4
	L-804	49,000	5
F-500	F-500	15,000	1½
	F-501	10,000	1
	F-502	16,000	1½
	F-503	17,000	2
	F-504	18,000	2
	F-505	20,000	2
F-600	F-600	19,500	2
	F-601	15,000	1½
	F-602	20,000	2
	F-610	21,000	2½
	F-611	22,000	2½
	F-612	23,000	2½
	F-613	23,000	2½
	F-614	23,000	2½
	F-615	24,000	2½
	F-616	19,700	1¾
F-700	F-700	22,000	2½
	F-701	17,000	2
	F-702	23,000	2½
	F-703	24,000	2½
	F-704	25,500	3
	F-705	23,000	2½
	F-706	23,000	2½
	F-707	25,500	3
F-750	F-750	22,500	2½
	F-751	17,000	2
	F-752	23,000	2½
	F-753	24,000	2½
	F-754	25,500	3
	F-755	23,000	2½
	F-756	25,500	3
	F-757	23,000	2½
	F-758	27,500	3½
	F-759	28,000	3½
F-8000	F-800	23,000	2½
	F-801	17,000	2
	F-802	24,000	2½
	F-803	25,500	3
	F-804	27,500	3½
	F-805	23,000	2½
	F-806	25,500	3
	F-807	27,500	3½
	F-808	27,500	3½
	F-809	25,500	3
	F-810	30,000	4
N-500	N-500	15,000	1½
	N-501	10,000	1
	N-502	16,000	1½
	N-503	17,000	2
	N-504	18,000	2
	N-505	20,000	2
N-600	N-600	19,500	2
	N-601	15,000	1½
	N-602	20,000	2
	N-610	21,000	2½
	N-611	22,000	2½
	N-612	23,000	2½
	N-613	23,000	2½
	N-614	23,000	2½
	N-615	24,000	2½
	N-616	19,700	1¾
N-700	N-700	22,000	2½
	N-701	17,000	2
	N-702	23,000	2½
	N-703	24,000	2½
	N-704	25,500	3
	N-705	23,000	2½
	N-706	23,000	2½
	N-707	25,500	3
	N-708	25,500	3
N-750	N-750	22,500	2½
	N-751	17,000	2
	N-752	23,000	2½
	N-753	24,000	2½
	N-754	25,500	3
	N-755	23,000	2½
	N-756	25,500	3
	N-757	23,000	2½
	N-758	25,500	3
T-800	T-800	43,000	4
	T-801	27,000	2½
	T-802	45,000	4
	T-803	49,000	5
	T-804	43,000	4
	T-805	36,000	3
	T-806	37,000	3½
	T-807	39,000	3½
	T-808	41,000	4
	T-809	29,000	3

Brakes

GROUP 2

PART 2-1	PAGE
General Brake Service	2-1
PART 2-2	
Hydraulic Brakes	2-14
PART 2-3	
Parking Brakes	2-37
PART 2-4	
Vacuum Boosters	2-46
PART 2-5	**PAGE**
Air-Hydraulic Booster	2-66
PART 2-6	
Air Supply System	2-72
PART 2-7	
Air Brakes	2-79
PART 2-8	
Specifications	2-101

PART 2-1— *General Brake Service*

Section	Page
1 Diagnosis and Testing	2-2
Brake System Tests	2-2
Preliminary Tests—Power Brakes	2-4
Vacuum Tests	2-5
Hydraulic Pressure Test	2-6
Air Supply System	2-7
Air Hydraulic Brakes	2-9
Air Brakes	2-10
2 Common Adjustments and Repairs	2-11
Air Check of Booster Push Rod Adjustment - Midland Ross Booster Dash Mounted -F-, B,-N500 Thru 600, and B-700 Series Trucks	2-11
Brake Pedal Adjustment	2-11
Brake Drum Repair 250 through 1000 Series Except 4-Wheel Drive—Front	2-12
Brake Drum Refinishing	2-14
Brake Shoe Relining	2-15
3 Cleaning and Inspection	2-15
Brake Cylinder	2-15
Master Cylinder	2-16
Brake Drums and Linings	2-16
Brake Booster	2-17
Cam-Type Air Brakes	2-17
Bendix Wedge-Type Air Brakes	2-17

1 DIAGNOSIS AND TESTING

Hydraulically operated service brakes are standard equipment on all 100 through 800 Series and on some 850 and 950 Series Ford trucks.

A dual-master cylinder brake system is used as standard equipment on F-100 through 350 and P-100 vehicles.

The standard hydraulic brake system on some vehicles is assisted by a vacuum booster which may be installed as either standard or optional equipment. Other vehicles use an optional compressed air booster (air-hydraulic unit) to provide a power assist to the hydraulic brakes. Service information on these two booster units is given in Parts 2-4 and 2-5.

The fuel air brake system, optional on some models and standard on most 850 through 1000 models, is covered in Part 2-7.

BRAKE SYSTEM TESTS

HYDRAULIC BRAKE FLUID LEVEL AND HYDRAULIC SYSTEM

1. Always check the fluid level in the brake master cylinder reservoir(s) before performing the test procedures. If the fluid level is not within 1/4 to 1/2 inch of the top of the master cylinder reservoirs, add the specified brake fluid. Add Rotunda Brake Fluid —Heavy Duty—Part Number B7AZ-19542-A, R-103-A or equivalent for power drum or standard drum applications.

DUAL-MASTER CYLINDER BRAKE SYSTEM

1. Turn the ignition switch to the ACC or ON position. If the light on the brake warning lamp remains on, the condition may be caused by a defective switch, grounded switch wires or the differential pressure valve is not centered. Centralize the differential pressure valve as outlined under Hydraulic System Bleeding and Centralizing of the Differential Valve in this section of the manual. If the warning light remains on, check the switch connector and wire for a grounded condition and repair or replace the wire assembly. If the condition of the wire is good, replace the brake warning lamp switch.

2. Turn the ignition switch to the start position. If the brake warning lamp does not light, check the light and wiring for defects and replace or repair wiring.

3. If the brake warning lamp does not light when a pressure differential condition exists in the brake system, the warning lamp may be burned out, the warning lamp switch is inoperative or the switch to lamp wiring has an open circuit. Check the bulb and replace it, if required. Check the switch to lamp wires for an open circuit and repair or replace them, if required. If the warning lamp still does not light, replace the switch.

The trouble-diagnosis symptoms, causes, and corrections given under Diagnosis Guide-Standard Hydraulic Brakes, apply to all truck hydraulic brakes including those with a dual brake system, vacuum booster or an air-hydraulic unit.

PRELIMINARY CHECKS

Push the brake pedal down as far as it will go. If the pedal travels more than halfway between the released position and the floor, adjust the brakes.

Road test the vehicle and apply the brakes at a speed of about 20 mph to see if the vehicle stops evenly. If not, the brakes should be adjusted. **Perform the road test only when the brakes will apply and the vehicle can be safely stopped.**

PRELIMINARY TESTS—POWER BRAKES

With the engine stopped, eliminate all vacuum from the system by pumping the brake pedal several times. Then push the pedal down as far as it will go, and note the effort required to hold it in this position. If the pedal gradually moves downward under this pressure, the hydraulic system is leaking and should be checked by a hydraulic pressure test.

With the brake pedal still pushed down, start the engine. If the vacuum system is operating properly, the pedal will move downward. If the pedal position does not change, the vacuum system is not operating properly and should be checked by a vacuum test.

VACUUM TESTS

CHECK VALVE TEST

Disconnect the line from the bottom of the vacuum check valve, and connect a vacuum gauge to the valve. Start the engine, run it at idle speed, and check the reading on the vacuum gauge.

The gauge should register 17-19 inches with standard transmission and 14-15 inches in Drive range if equipped with an automatic transmission. Stop the engine and note the rate of vacuum drop. If the vacuum drops more than one inch in 15 seconds, the check valve is leaking. If the vacuum reading does not reach 18 inches or is unsteady, an engine tune-up is needed.

Remove the gauge and reconnect the vacuum line to the check valve.

BOOSTER TEST—BENDIX PISTON TYPE

Disconnect the vacuum line from the booster end plate. Install a tee fitting in the end plate, and connect a vacuum gauge (No. 1) and the vacuum line to the fitting. Install a second vacuum gauge (No. 2) in place of the pipe plug in the booster control valve body.

Start the engine, and note the vacuum reading on both gauges. If both gauges do not register manifold vacuum, air is leaking into the vacuum system. If both gauges register manifold vacuum, stop the engine and note the rate of vacuum drop on both gauges. If the drop exceeds one inch in 15 seconds on either gauge, air is leaking into the vacuum system. Tighten all vacuum connections and repeat the test. If leakage still exists, the leak may be localized as follows:

1. Disconnect the vacuum line and gauge No. 1 from the booster.

2. Connect vacuum gauge No. 1 directly to the vacuum line. Start the engine and note the gauge reading. Stop the engine and check the rate of vacuum drop. If gauge No. 1 does not register manifold vacuum, or if the vacuum drop exceeds 1 inch in 15 seconds, the leak is in the vacuum line or check valve connections.

3. Reconnect vacuum gauge No. 1 and the vacuum line to the tee fitting. Start the engine, and run it at idle speed for one minute. Depress the brake pedal sufficiently to cause vacuum gauge No. 2 to read from zero to 1 inch of vacuum. Gauge No. 1 should register manifold vacuum of 17-19 inches with standard transmission and 14-16 inches in Drive range if equipped with an automatic transmission. If the drop of vacuum on gauge No. 2 is slow, the air cleaner, or air cleaner line, may be plugged. Inspect and clean the air cleaner if necessary.

4. Release the brake pedal and observe the action of gauge No. 2. Upon releasing the pedal, the vacuum gauge must register increasing vacuum until manifold vacuum is reached. The rate of increase must be smooth, with no lag or slowness in the return to manifold vacuum. If the gauge readings are not as outlined, the booster is not operating properly and should be removed and overhauled.

BOOSTER TEST-MIDLAND DIAPHRAGM TYPE (FRAME-MOUNTED)

Remove the pipe plug from the rear half of the booster chamber, and install a vacuum gauge. Start the engine and run it at idle speed. The gauge should register 18-21 inches of vacuum.

1. With the engine running, depress the brake pedal with enough pressure to show a zero reading on the vacuum gauge. Hold the pedal in the applied position for one minute. Any downward movement of the pedal during this time indicates a brake fluid leak. Any kickback (upward movement) of the pedal indicates brake fluid is leaking past the hydraulic piston check valve.

2. With the engine running, push down on the brake pedal with sufficient pressure to show a zero reading on the vacuum gauge. Hold the pedal down, and shut the engine off. Maintain pedal position for one minute. A kickback of the pedal indicates a vacuum leak in the vacuum check valve, in the vacuum line connections, or in the booster.

HYDRAULIC PRESSURE TEST

Connect a 2000-psi hydraulic pressure gauge to a bleeder screw opening at one of the brake cylinders. **Bleed the air from the hydraulic system at the point of attachment of the gauge.**

Remove the pipe plug from the rear of the booster body or the trailer brake control line port, and connect a vacuum gauge at this point. With the engine running, apply the brakes enough to obtain a zero reading on the vacuum gauge. Then, note the reading on the pressure gauge. The minimum hydraulic pressure for each type and side of vacuum booster is given in Part 2-8. **If the engine vacuum is higher or lower than 20 inches Hg, the vacuum booster hydraulic pressure will be proportionately higher or lower than the pressure given in Part 2-8.**

Hold the brakes in the fully-applied position for at least one minute, and note the reading on the pressure gauge. The hydraulic system should hold pressure for at least one minute without losing pressure. A low pressure reading or a drop in pressure, indicates leakage in the booster or in the hydraulic system.

AIR SUPPLY SYSTEM

The same air supply system is used with either the air booster brake system (Part 2-5) or the full air brake system (Part 2-7). In the air booster system, air pressure increases or boosts the hydraulic pressure applied to the shoes. In the full air system, air pressure is applied directly to the shoes through a diaphragm and mechanical linkage.

If either of these two brake systems is not operating properly, the air supply system should be checked first.

OPERATING TESTS

Before performing any of the following tests, operate the engine until the air pressure builds up to 90 psi. With the air brake system charged, open the drain cocks in each reser-

voir. Close the drain cocks after all moisture is drained from the reservoirs.

Low Pressure Indicator

Exhaust the brake system pressure and observe the pressure at which the warning buzzer sounds. The contacts in the indicator should close the circuit to the buzzer, when reservoir pressure is between 54 psi minimum and 66 psi maximum. If the buzzer does not start to sound within this pressure range during discharge, or if a sounding buzzer does not stop within this pressure range during the pressure buildup, the electrical connections are loose or the indicator valve is defective.

Reservoir Safety Valve

To determine if the safety valve is operative, pull the exposed end of the valve stem. If the safety valve does not blow off when the stem is pulled, the valve ball is probably stuck in its seat. In such a case, remove and disassemble the valve for cleaning.

Governor

With the engine running, build up air pressure in the system, and observe at what pressure reading on the dash gauge the pressure stops climbing. This is the point of governor cutout which should be between 118 and 125 pounds.

With the engine still running, slowly reduce the air pressure in the system by applying and releasing the brakes. Observe the pressure reading on the dash gauge at the point where the pressure starts to build up again. This is the point of governor cut-in which should be between 98 and 104 pounds.

If the governor does not cut the compressor in and out according to these specifications, adjust the governor pressure settings. Before adjusting the governor, check the accuracy of the dash gauge with a test gauge.

Check Pressure Build-Up

With the engine running at fast idle speed, observe the time required to raise system pressure from 50 to 90 pounds. If more than five minutes is required, perform the leak tests as outlined in the following paragraphs.

Also check for no unloading valve clearance, low engine idle speed, a slipping compressor drive belt, excessive carbon in the compressor cylinder head, or a worn out air compressor.

LEAK TESTS

Compressor

With the engine stopped, discharge valve leakage can be detected by carefully listening at the compressor for the sound of escaping air. With air pressure applied to the unloader cavity (with governor cut-out), remove the air filter or the air pick up tube on SD V-8 engines and check for air leaks by squirting oil around the unloader plunger and stem. If excessive air leaks are found, replace the piston seal.

Governor

With the governor in the cutout position, test for leakage at the exhaust valve by applying soap suds to the exhaust vent in the body.

With the governor in the cut-in position, test for leakage of the inlet valve by applying soap suds to the exhaust vent in the body.

In either of the foregoing tests, leakage in excess of 1-inch soap bubble in three seconds indicates a defective governor.

Coat the entire governor with soap suds to detect diaphragm, gasket, and cap screw leakage. No leakage is permissable.

Reservoir Safety Valve

Coat the end of the safety valve with soap suds. Leaks causing not more than a 3-inch soap bubble in three seconds are permissable.

AIR-HYDRAULIC BRAKES

The trouble diagnosis procedures given here apply only to the booster unit and the applicable air system components.

First make the trouble diagnosis checks outlined under Hydraulic Brakes and Air Supply System. Then perform the tests outlined in the following paragraphs.

OPERATING TESTS

Air Discharge Test

With the air pressure at 90 psi, depress the brake pedal several times and listen for air discharge as the pedal is released. Rapid release of air pressure indicates that the booster unit is operating. If no air discharge is heard, the booster control valve is defective or the connecting lines are restricted.

Air Leak Test

Operate the engine until the air pressure builds up to 90 psi. Stop the engine and watch the pressure gauge. If the air pressure drops more than 5 pounds in 15 seconds, check for internal leaks in the system, particularly at hose or pipe connections, a defective valve or piston in the booster, a defective air gauge (registering incorrectly), or leaking governor or compressor discharge valves.

Hydraulic Pressure Test

Connect a hydraulic pressure gauge (capable of reading at least 1200 psi pressure) to a bleeder screw opening at one of the brake cylinders.

Remove the lubrication pipe plug from the rear of the booster body assembly and connect an air pressure test gauge at this point. Apply the brakes until approximately 60 psi is registered on the air gauge. Note the reading on the hydraulic pressure gauge. Hydraulic pressure should be 950 to 1100 psi when air pressure is at 60 psi. If air pressure is higher or lower than 60 psi, hydraulic pressure will be proportionately higher or lower than 950 to 1100 psi.

Hold the brakes in the fully applied position for at least one minute. Note the reading on the hydraulic pressure gauge. A low pressure reading, or a drop in pressure indicates leakage in the booster unit or in the other hydraulic system components.

Booster Test

With the air pressure at 90 psi, depress the brake pedal. Measure and record the distance from the pedal to the floor.

Release the pedal and bleed all the air from the system. Depress the pedal, and again measure the distance from the pedal to the floor. The second measurement should be approximately 1/2 inch more than the dimension obtained with the booster system operating under air pressure. If there is no noticeable difference in the measurements, the booster is defective.

AIR BRAKES

Some of the air brake system components vary slightly from one vehicle model to another in design or location. However, all components are essentially the same in principle and service procedure.

First make the trouble diagnosis checks outlined under Air Supply System, and then perform the tests outlined in the following paragraphs.

OPERATING TESTS

Check Stop Light Switch

With all air pressure exhausted from the air brake system, start the engine and move the brake valve to the applied position. Stop lights should light before the dash gauge registers 10 psi pressure. Release the brakes.

Quick Release Valve and Relay Valve

With the air brake system fully charged, apply the brakes. Inspect the brake action on the wheels controlled by the quick release valve or relay valve in question. The brakes should apply promptly. Release the brakes and inspect to be sure that the air pressure is exhausted rapidly from the exhaust port. Be sure the exhaust port is not restricted.

LEAK TESTS

With the engine stopped and the brakes fully applied, watch the rate of drop in air pressure as registered by the dash gauge. If the pressure drops faster than 3 pounds per minute, check the items outlined in the following paragraphs.

Brake Valve

With the pedal fully released, coat the exhaust port with soap suds to check for leaks. With the pedal fully applied, coat the exhaust port with soap suds and check for leaks. Leaks causing not more than a three inch soap bubble in three seconds are permissable.

Brake Chambers

With the brakes fully applied, coat the clamp ring and bolt flanges holding the diaphragm in place with soap suds. No leaks are permissable.

Quick Release Valve

With brakes applied, coat the exhaust port with soap suds to detect leakage. Leakage in excess of a 3-inch soap bubble in three seconds is not permissable.

Relay Valve

With the brakes **released,** coat the exhaust port with soap suds and observe the leakage.

With the brakes fully **applied,** coat the exhaust port with soap suds and observe the leakage.

Leakage in either of the foregoing tests should not exceed a 3 inch soap bubble in three seconds.

2 COMMON ADJUSTMENTS AND REPAIRS

AIR CHECK OF BOOSTER PUSH ROD ADJUSTMENT—MIDLAND ROSS BOOSTER (DASH MOUNTED—F-, BN-500 THRU 600, AND B-700 SERIES TRUCKS

Whenever the master cylinder or booster has been repaired or replaced, the brake system must be checked for proper return flow of hydraulic brake fluid from the wheel cylinders to the reservoir of the master cylinder. This check will assure that the brake booster to master cylinder push rod is properly adjusted to allow the master cylinder compensating valve to open when the brake pedal is in the fully-released position.

The air check is made after the brake booster and master cylinder has been installed and before the master cylinder hydraulic line connection is made and the reservoir is filled with brake fluid.

1. Connect the brake vacuum line to the vacuum booster, if required. Start the engine.

2. Position the nozzle of an air hose to the master cylinder discharge port. Place a hand over the master cylinder reservoir and apply air pressure through the air hose nozzle.

If free passage air pressure is felt on the hand located over the master cylinder reservoir, the brake booster push rod is properly adjusted.

If no air pressure is felt on the hand located over the reservoir, the master cylinder must be removed and the push rod length shortened. To shorten the push rod length, turn the acorn-type screw on the brake booster push rod inward, one turn at a time, until the air check shows the brake master cylinder compensating valve is open.

BRAKE PEDAL ADJUSTMENT

On dual-brake master cylinder equipped vehicles, the brake systems are designed to permit full stroke of the master cylinder when the brake pedal is fully depressed. A brake pedal clearance adjustment is not required.

In order to release the brakes, fluid in a hydraulic brake system must flow back to the master cylinder when pedal pressure is released. A port is provided in the master cylinder to allow this flow, but the piston must move back far enough to expose the return port. To be sure that this will always happen, free-travel is built into the pedal linkage on standard and on frame-mounted booster systems. This free-travel prevents the piston from becoming trapped in a partially released position. Pedal free travel is not always perceptible in dash-mounted booster systems, however, because the operating clearance for the piston is adjusted at the booster push-rod, rather than the pedal linkage. (Refer to Part 2-4 for instructions on dash-mounted booster push-rod adjustments).

If the pedal free travel in a standard hydraulic brake system or frame mounted hydraulic booster system is less than 3/16 inch or more than 3/8 inch (Fig. 1), the pedal should be adjusted.

To adjust free-travel:

1. Push the brake pedal down by hand pressure, and check the free travel.

2. Loosen the lock nut on the eccentric bolt, and rotate the eccentric bolt until the free travel is within 3/16-3/8 inch.

On a P-Series truck, turn the hex head of the push rod to obtain the required free-travel.

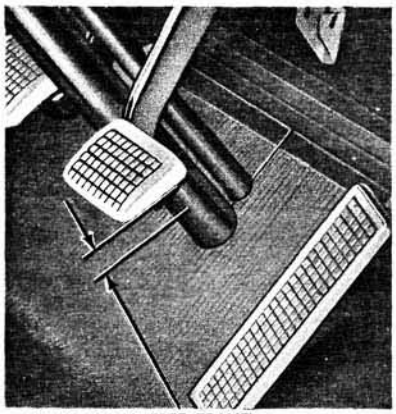

FIG. 1—Pedal Free Travel Check

3. Hold the bolt securely, and torque the lock nut to 30-35 ft-lbs.

4. Recheck the pedal free-travel to make sure that the adjustment did not change when the lock nut was tightened.

BRAKE DRUM REPAIR 250 THROUGH 1000 SERIES EXCEPT 4-WHEEL DRIVE-FRONT

The service procedures covered here apply to both hydraulic and air brakes. Since the F-100 and P-100 (front and rear) and the 4-wheel drive front brake drum procedures apply to hydraulic brakes only, they are covered in Section 3 of Part 2-2.

FRONT BRAKE DRUM

1. Raise the truck until the wheel and tire clear the floor and remove the wheel and tire from the hub. Back off the brake shoe adjusting screw so that the shoes do not contact the brake drum. Remove the grease cap and the gasket (if so equipped) from the hub.

2. With 4,000 through 7,000 lb. and 18,000 lb. front axles, remove the cotter pin, adjusting nut and flat washer from the spindle.

On trucks with a 9,000 lb. or 11,000 or 15,000 lb. axle, remove the lock nut, the dimpled washer, the locking ring and the adjusting nut and pin assembly.

3. Remove the outer bearing cone and roller. Pull the hub and drum assembly off the wheel spindle.

4. Remove the front wheel to hub retaining nuts or rim and tire attaching nuts. Remove the wheel or rim and tire from the hub and drum.

5. Remove the brake drum retainers and attaching bolts, screws, or bolts and nuts.

6. Remove the brake drum from the hub.

7. Check the drum for defects or wear, and repair or replace as necessary. If a new drum is to be installed, be sure to remove the protective coating with a suitable degreaser.

8. Place the brake drum to the hub and install the retainers and retaining bolts, screws, or bolts and nuts.

9. Install the hub and drum on the wheel spindle. **Keep the hub centered on the spindle to prevent damage to the grease retainer or the spindle threads.**

10. With 4,000 through 7,000 lb. and 18,000 lb. front axles, install the outer bearing cone and roller and the flat washer on the spindle, then install the adjusting nut. With front axles of 9,000 lbs., 11,000 or 15,000 lbs. capacity, install the outer bearing cone and roller and the bearing adjusting nut and pin assembly.

11. Install the wheel and tire on the hub, then install the clamps (cast type only), and the wheel stud nuts.

12. With 4,000 through 7,000 lb. and 18,000 lb. front axles, torque the adjusting nut to specifications while rotating the wheel. Back off the adjusting nut at least one, but not more than two castellations (about 1/6 to 1/4 turn). Lock the adjusting nut in this position with a new cotter pin.

With 9,000 lb., 11,000 or 15,000 lb. axles, torque the adjusting nut to specifications while rotating the wheel. Back off the nut 1/4 to 1/3 turn, and install the locking ring. **Do not exceed the 1/4 to 1/3 turn if the adjusting nut must be moved to align the nut pin with a hole in the locking ring.**

Install the dimpled washer with the dimple indexed in one of the holes in the adjusting nut. Install the lock nut and torque to specifications. Bend the dimpled washer over a flat of the lock nut.

13. Install the gasket (if so equipped) and the grease cap, and torque the wheel stud nuts to specifications. Install the hub cap if so equipped, and adjust the brakes.

REAR BRAKE DRUM

1. Raise the truck and install stands.

2. Remove the wheel and tire as an assembly. Then back off the rear brake shoe adjustment.

3. Remove the rear axle shaft retaining nuts, adapters, axle shaft, and grease seal.

4. Remove the wheel bearing locknut, lock washer, and adjusting nut.

5. Remove the hub and drum from the axle.

6. Remove the brake drum to hub retaining screws, bolts, or bolts and nuts. Then remove the brake drum from the hub.

7. Check the drum for defects or wear, and repair or replace as necessary. If a new drum is to be installed, be sure to remove the protective coating with a suitable degreaser.

8. Position the brake drum to the hub and install the attaching screws, bolts, or bolts and nuts.

9. Position the hub and drum as an assembly on the axle and start the adjusting nut.

10. Adjust the wheel bearing nut and then install the wheel bearing lock washer and locknut.

11. Install a new rear axle oil seal, axle shaft and gasket, stud adapters, and attaching nuts.

12. Install the wheel and tire as an assembly.

13. Adjust the brake shoes and then remove the stand and lower the truck.

BRAKE DRUM REFINISHING

Minor scores on a brake drum can be removed with fine emery cloth, provided the emery is thoroughly cleaned off the drum after the operation.

A badly scored, rough, or out-of-round drum should be ground or turned on a drum lathe. Do not remove any more material from the drum than is necessary to provide a smooth surface for the brake shoe contact. The refinished diameter should not be more than 0.060 inch oversize for steel backed cast iron drums and 0.090 for solid cast iron drums except F-100-F-350 full cast drum, which is 0.060 inch. For original brake drum sizes, see Part 2-8.

If the diameter of the drum is less than 0.030 inch oversize after refinishing, install standard linings on the brake assemblies. If the diameter is over 0.030 inch, install oversize or shimmed linings.

BRAKE SHOE RELINING

1. Remove the rivets and remove the old lining.

2. Clean the shoe thoroughly with cleaning fluid, especially the rim surface. Wipe the shoe dry and remove all burrs or rough spots from the shoe.

3. Check the inside diameter of the brake drum. If the diameter is less than 0.030 inch oversize, install standard linings. If the diameter is 0.030-0.060 inch oversize, install oversize or shimmed linings.

4. Position the new lining on the shoe and install new rivets, beginning with the rivet holes near the center of the shoe. On some vehicles, the primary lining is shorter than the secondary lining. If this condition exists, position the shorter (primary) lining to line up with the heel end of the shoe. **Do not let brake fluid oil or grease touch the brake lining. If a brake lining kit is used to replace the worn linings, install all the parts supplied in the kit.**

5. Check the clearance between the lining and shoe rim. The lining must seat snugly against the rim with not more than 0.005 inch separation midway between any two rivets. If only the linings are replaced on duo-servo single anchor brakes with fixed anchor pins, the brake linings must be cam ground 0.010 inch at the ends after the linings are riveted to the brake shoe.

3 CLEANING AND INSPECTION

BRAKE CYLINDER

1. Clean all brake cylinder parts in clean denatured alcohol. Inspect all parts for wear or damage. Check the cylinder bore for rust, scores, or other damage. Be sure that the bleeder screw passage is clean and open. Replace all parts that are worn or damaged.

2. If dirt is found in any part of the hydraulic system, flush the entire system with clean denatured alcohol.

MASTER CYLINDER

1. Clean all master cylinder parts in clean denatured alcohol, and inspect the parts for wear or damage, replacing them as required. **When a master cylinder repair kit is used, install all of the parts supplied in the kit.**

2. Check the ports and vents in the master cylinder to make sure that all are open and free of foreign matter.

3. On a single brake system master cylinder, check to see if the spring valve (riveted to the front end of the piston) is loose or has moved so that the piston ports are open, replace the piston.

4. Inspect the cylinder walls for scores or rust, and recondition them if necessary. Hone the cylinder walls no more than necessary (0.003 inch maximum), either to remove scores and rust, or to obtain a smooth wall surface. Remove any burrs or loose metal that may have resulted from the honing operation, and clean the cylinder with clean denatured alcohol.

BRAKE DRUMS AND LININGS

1. After removing one front wheel and drum from the vehicle, inspect the drum and brake shoe linings for wear or damage that would affect brake operation. **Do not let brake fluid, oil or grease touch the drum or linings.**

2. A brake shoe should be relined when the lining face is worn to within 1/32 inch of any rivet head, or when the lining has been soaked with brake fluid, oil or grease. If a worn lining is not replaced, the brake drum may become severely damaged. **Always replace the primary and secondary brake shoe lining assemblies on both front or both rear brake assemblies at the same time.**

3. Before relining a brake shoe, inspect the shoe for distortion, cracks, or looseness between the rim and web. If one of these conditions exists, replace the shoe. **Do not attempt to repair a damaged brake shoe.**

4. If the drum and linings are in good condition, install the wheel and drum. **The condition of the drums and linings of the other three wheels will usually be about the same as that found at the wheel that was removed.**

5. Add enough heavy-duty brake fluid to the master cylinder reservoir to bring the level to within 1/4 to 1/2 inch of the top of the filler neck.

6. Check to be sure that the parking brake handle is fully released before making any brake adjustment.

7. Check the front brake anchor pin nut with a wrench (on brake assemblies with an adjustable anchor pin). If the bolt is loose, torque it to 80-100 ft-lbs.

BRAKE BOOSTER

1. After disassembly, immerse all metal parts in a suitable cleaning solvent and dry them with compressed air. Use only alcohol on rubber parts or parts containing rubber. After the parts have been thoroughly cleaned and rinsed in cleaning solvent, the metal parts which come in contact with hydraulic brake fluid should be rewashed in clean alcohol before assembly. Use an air hose to blow dirt and cleaning fluid from the recesses and internal passages. When overhauling a power booster, use all parts furnished in the repair kit. **Discard all old rubber parts.**

2. Inspect all other parts for damage or excessive wear. Replace damaged or excessively worn parts. If the inside of the booster body is rusted or corroded, polish it with steel wool or fine emery cloth. Replace the body shell when scored. Inspect the master cylinder bore for signs of scoring, rust, pitting or etching. Any of these conditions will require replacement of the cylinder.

CAM-TYPE AIR BRAKES

1. Inspect the camshaft bushings and replace if worn or damaged.

2. Check the anchor pins and shoe-to-cam rollers for wear or damage, and replace, if required.

3. Check thickness of the brake lining at the center of the shoe, and replace, if necessary.

4. Clean, inspect, and replace worn or damaged parts. Coat the anchor pins and cam lobes with Lubriplate before installing the shoes.

BENDIX WEDGE-TYPE AIR BRAKES

Clean the metal parts in a non-oily cleaning solvent. **Replace the rubber parts whenever the brake is disassembled.** Replace damaged or worn metal parts. **Do not use gasoline or hot water solutions on metal parts.**

Inspect the following parts and replace defective pieces:

WEDGE

Check rod and wedge surfaces for scoring. The wedge angle, 10°, 14° or 18°, is stamped on the side of the wedge. If the wedge assembly must be replaced, use an assembly with the same wedge angle.

PLUNGERS

Check outside surface for scoring. On anchoring plungers, check shoe web slot for roughness.

ADJUSTING SCREW AND NUT

Check for sheared threads. Check adjuster ring teeth for wear.

LINK

Check shoe web slot for roughness and cracks.

ROLLERS

Check for score marks, cracks or flat spots.

SPRING CLIP

Check clip for fatigue cracks.

AUTOMATIC ADJUSTMENT LEVER AND SPRING

Inspect for broken spring. Check lever for fatigue cracks and distortion.

OVERLOAD SPRING

Inspect spring for fatigue cracks. Replace if test load is less than 13 lb. when spring ends are compressed 1/2 inch apart.

ACTUATOR CASTING (TORQUE SPIDER)

Inspect machined bores for rough-

ness. Use emery cloth to remove any rough areas which interfere with plunger movement. Check automatic adjuster pin for corrosion or distortion. Check the shoe guide bosses and steady rest for roughness on the rubbing surfaces. Inspect the mounting and holes of torque spider for cracks.

INSPECTION OF ADJUSTER

Clean all metal parts in a non-oily solvent. Replace all damaged or worn parts, and whenever the brake is disassembled, replace all rubber parts. Coat all threads and bearing surfaces of links with Bendix Special Brake Lubricant or brick Lubriplate. Use same lubricant on plunger and also dip spring and lever in light oil. Check and refinish bores, if necessary, with crocus cloth or hone.

POSSIBLE CAUSES OF TROUBLE	TROUBLE SYMPTOMS																
	One Brake Drags	All Brakes Drag	Hard Pedal	Spongy Pedal	Car Pulls to One Side	One Wheel Locks	Brakes Chatter	Excessive Pedal Travel	Pedal Gradually Goes to Floor	Brakes Uneven	Shoe Click After Release	Noisy or Grabbing Brakes	Brakes Do Not Apply	Brakes for the respective system do not apply.	Warning lamp stays lit.	Pedal gradually moves toward floor or dash panel.	Warning lamp does not light
Mechanical Resistance at Pedal or Shoes		X	X														
Brake Line Restricted	X	X	X		X												
Leaks or Insufficient Fluid				X				X	X				X			X	
Improper Tire Pressure					X					X							
Distorted or Improperly Adjusted Brake Shoe		X	X		X	X		X				X					
Faulty Retracting Spring	X				X												
Drum Out of Round	X				X		X										
Lining Glazed or Worn			X		X	X	X	X				X	X				
Oil or Grease on Lining					X	X	X			X		X	X				
Loose Backing Plate	X					X	X										
Loose Lining							X										
Scored Drum										X		X					
Dirt on Drum Lining Surface												X					
Faulty Brake Cylinder	X				X	X						X					
Dirty Brake Fluid	X	X								X			X				
Faulty Master Cylinder		X						X	X				X			X	
Air in Hydraulic System	X			X				X					X				
Self-Adjusters Not Operating					X			X									
Insufficient Shoe to Backing Plate Lubrication	X										X	X					
Tire Tread Worn						X											
Poor Lining to Drum Contact							X										
Loose Front Suspension							X										
Threads Left by Drum Turning Tool Pulls Shoes Sideways											X						
Cracked Drum								X									
One Section Dual Brake System Is Inoperative														X	X		
Differential Pressure Valve Is Not Centered															X		
Wiring To Warning Lamp Switch Is Grounded															X		
Warning Lamp Switch Is Grounded															X		
Warning Lamp Is Burned Out																	X
Warning Lamp Switch Has An Open Circuit																	X
Wiring to Warning Lamp Has Open Circuit																	X

FIG. 2—Diagnosis Guide — Standard Hydraulic Brakes

BOOSTER INOPERATIVE—HARD PEDAL	The trouble may be caused by vacuum leakage. Disconnect the vacuum line at the booster, remove the vacuum manifold and check valve assembly, and look for a sticking or faulty check valve. Check all vacuum connections for leakage or obstruction. Check all hoses for a leaking or collapsed condition. Repair or replace parts as necessary. If the foregoing procedure does not eliminate the trouble, remove the	booster from the car. Separate the front shell from the rear shell, and check the valve and rod assembly reaction disc, diaphragm plate, and diaphragm assembly for damage that would cause leaks. When assembling, be sure that the diaphragm assembly is properly positioned. Improper location could cause leakage between the vacuum and atmospheric sides of the diaphragm.
BRAKES DRAG OR GRAB	The condition is probably caused by a sticking valve plunger assembly. Remove and disassemble the booster.	Clean, inspect, and replace parts as necessary.
SELF APPLICATION OF BRAKES WHEN ENGINE STARTS	Remove and disassemble the booster. Check for a leak in the rear shell. Check the diaphragm for being out of locating radii in the housing. Check	for a sticking or unseated valve poppet. Clean, inspect, and replace parts as necessary. Be sure that the diaphragm is properly located when assembling.

FIG. 3—Diagnosis Guide — Power Brakes Vacuum Booster — Bendix Dash Mounted

BOOSTER INOPERATIVE HARD PEDAL	Check as follows to see if the power unit is operating: With the engine stopped, depress the brake pedal several times to eliminate all vacuum from the system. Apply the brakes, and while maintaining pressure on the pedal, start the engine. If the unit is operating, the brake pedal will move forward slightly when engine vacuum power is added to the foot pressure on the pedal. If the unit is not operating, there will be no pedal action. If this check shows that the unit is not operating, check for the following:	Brake pedal linkage sticking. Faulty vacuum check valve. Collapsed or leaking vacuum hose. Plugged vacuum fittings. Leaking vacuum chamber. Vacuum check valve stuck in closed position. Leak in bellows assembly. Diaphragm assembly out of place in housing locating radii: Vacuum leak in automatic transmission T.V. vacuum line connection or fitting. Vacuum leak in forward, vacuum housing.
BRAKES DRAG	Sticking valve plunger.	
BRAKES GRAB	Sticking actuating valve assembly.	
SELF APPLICATION OF BRAKES WHEN ENGINE STARTS	Leak in rear housing. Diaphragm out of locating radii in housings and allowing atmospheric	pressure into rear chamber. Sticking or unseated atmospheric valve.

FIG. 4—Diagnosis Guide — Power Brakes Vacuum Booster — Midland Dash Mounted

BRAKE PEDAL KICKS BACK WHEN APPLIED	This condition may be caused by a defective hydraulic piston check valve or slave cylinder piston cup.	Replace the slave cylinder piston and/or piston cup.
ROUGH ENGINE IDLE WITH BRAKES RELEASED	Check for vacuum leaks in the vacuum line, loose hose connections, a loose body clamp, or a weak control valve piston return spring. Check all connections and tighten them or replace damaged parts as required.	This condition may also be caused by vacuum leaks at the control valve diaphragm, at the valve piston assembly, or at the power diaphragm. Remove and overhaul the booster assembly.
ROUGH ENGINE IDLE OR STALL AND HARD PEDAL WITH BRAKES APPLIED	Check the condition of the air cleaner. If it is clogged with dirt, replace the air cleaner felt. A sticking control valve piston, leaks at the control valve diaphragm or atmospheric valve seal, dirt on the control	valve plate, or the control valve piston not seating properly on the plate may also cause this condition. In addition, the booster diaphragm may be damaged. Remove and overhaul the booster assembly.
INTERMITTENT HARD BRAKE PEDAL	Check for an obstructed air cleaner, a defective vacuum check valve, or a slave cylinder piston sticking in the bore due to dirt or inferior hy-	draulic fluid. Clean or replace damaged parts, refill the hydraulic system with new heavy-duty type brake fluid, and bleed the system.
HARD PEDAL—BOOSTER DIAPHRAGM RUPTURED	When a ruptured diaphragm is found, check for gasoline odor on the diaphragm. Gasoline will deteriorate the diaphragm and cause a premature failure.	Gasoline can get on the diaphragm from the intake manifold if the vacuum check valve is defective or if hoses are not routed correctly.
BRAKES DO NOT RELEASE	Check the rear of the vacuum chamber for damage. This condition may also be caused by a sticking control valve piston, a faulty slave cylinder piston check valve, dirty brake fluid, a sticking slave cylinder piston, a sticking push rod, or a faulty check valve in the end cap. Remove and overhaul the booster. In case of emergency, if a sticking	control valve piston holds the brakes in an applied position, disconnect the booster vacuum line from the vacuum check valve and install a pipe plug in the check valve opening. This permits the brakes to release. Manual application of brakes may then be made without assistance from the booster.

FIG. 5—Diagnosis Guide — Power Brakes Vacuum Boosters — Frame Mounted

AIR PRESSURE BELOW NORMAL	Defective air gauge. Compressor worn out. Compressor discharge valve leakage. Slipping compressor drive belt. Open reservoir drain cock. Excessive leakage at lines and fittings to reservoir tank.	Low engine speed. Excessive carbon in the compressor head or discharge line. Clogged compressor air strainer. Defective or improperly adjusted governor. Compressor inlet valves stuck closed.
AIR PRESSURE RISES ABOVE NORMAL	Defective or improperly adjusted governor. Compressor unloading valves stuck closed. Restriction in the passage between the governor and the compressor unloading mechanism. Defective air gauge.	Excessive clearance at the compressor unloading valves. Leak at compressor unloading piston seal. Carbon deposits in cavities beneath unloading piston and passages in the compressor cylinder head.
CONTINUOUS OR INTERMITTENT COMPRESSOR KNOCKS	Loose drive pulley. Worn or burned out compressor bearings.	Excessive carbon deposits in the compressor cylinder head.
SAFETY VALVE "BLOWS-OFF"	Governor cut-out setting adjusted too high. Above normal system pressure.	Defective or improperly adjusted safety valve.
EXCESSIVE OIL OR WATER IN THE BRAKE SYSTEM	Failure to drain the reservoirs at regular intervals.	Worn compressor piston rings. Dirty compressor air filter.

FIG. 6—Diagnosis Guide — Air Supply System

BRAKES WILL NOT APPLY	Compressor not operating. Broken or disconnected air line. Defective brake applying valve in truck or in towing vehicle.	Defective emergency relay valve. (If trouble is in trailer brakes only.) Punctured diaphragm in air chamber.
BRAKES APPLY BUT BRAKING IS NOT ADEQUATE	Vehicle is overloaded. Compressor drive belt is slipping. Low air pressure in brake system due to leak in lines or fittings. Leak at the air chambers.	Glazed linings in the wheel brakes. Brakes not properly adjusted. Brake drum broken or cracked. Improper brake blocks.
BRAKES APPLY TOO SLOWLY	Low air pressure in system. Restricted air hose or tubing. Excessive air leakage in system. Defective brake applying valve in truck or in towing vehicle.	Defective emergency relay valve. (If trouble is in trailer brakes only.) Leak at air chambers. Ice from condensed water in air tanks or hose.
BRAKES WILL NOT RELEASE	Defective brake applying valve in truck or towing vehicle. Two-way hand valve in towing vehicle is in emergency position. (If trouble is in trailer brakes only.) Broken wedge return spring in brake actuator housing.	Brake shoes adjusted too close to brake drum. Atmospheric vent on air chamber plugged. Insufficient air pressure to release spring brakes.
BRAKES RELEASE TOO SLOWLY	Defective brake applying valve in truck or towing vehicle. Restricted air line. Weak or broken brake shoe-to-shoe springs. Weak wedge return spring in actuator.	Shoe guide ledges dry or corroded. Binding of wedge actuating mechanism because of inadequate lubrication. Plungers corroded and frozen in cylinder bore.
GRABBY BRAKES OR UNEVEN BRAKING	Defective brake applying valve in vehicle or towing vehicle. Defective emergency relay valve. (If trouble is in trailer brakes only.) Grease on linings. Scored or broken brake drum. Distorted brake shoes.	Lining loose on shoes. Loose wheel bearing. Brake drum out-of-round. Binding of wedge actuating mechanism because of inadequate lubrication.
When trouble-diagnosing, investigate the entire system since braking problems may originate in many parts of the air brake system other than the basic wheel brakes.		

FIG. 7—Diagnosis Guide — Wedge-Type Air Brakes

LEAKING SPRING BRAKE (Air Pressure Loss)	Check air lines and connections. If air exhausts constantly from service brake port when spring brake has been charged with air, replace pushrod seal. If air exhausts constantly from	breather cap opening when spring brake has been charged with air, replace main seal. If air bubbles appear from under release bolt head, replace collar seal.
NO PARKING BRAKE	Spring brake is manually released. Screw in release bolt. Spring failure. Disassemble unit and replace spring. Service brake chamber piston rod not mated with wedge shaft.	Improper adjustment of wedge brakes. Check automatic adjuster mechanism for correct assembly and operation. Damaged or incorrectly assembled wedge brake. Check mechanism.
LEAKING SERVICE BRAKE AIR CHAMBER (Air Pressure Loss)	Check all lines and connections. Charge service brake chamber with air. Soap or oil test clamp ring. If bubbles appear, tighten clamp ring. If bubbles persist, replace diaphragm. If air exhausts constantly from	spring brake port when service brake chamber has been charged with air, replace pushrod seal. Examine diaphragm for wear, cracks or rupture. Replace, if necessary.
SPRING BRAKE WILL NOT RELEASE WITH AIR	Check air lines and connections. Insufficient air pressure being delivered to spring brake. Check pres-	sure at end of air line. Damaged or incorrectly assembled wedge brake. Check mechanism.

FIG. 8—Diagnosis Guide — Air Parking and Safety Brake

INSUFFICIENT BRAKING	Binding control valve piston due to swollen piston seals.	Defective hydraulic cylinder piston.
BRAKES APPLY TOO SLOWLY	Brake shoes improperly adjusted. Low system air pressure. Control valve delivery pressure too low.	Excessive air leakage when brakes are applied. Restricted brake lines or hoses.
BRAKES RELEASE TOO SLOWLY	Weak control valve piston return spring. Restricted control valve exhaust	port. Hydraulic piston binding in the cylinder.
BRAKES DO NOT APPLY	Restricted or broken lines or hoses. Clogged or damaged control valve.	Dented or damaged booster body.
BRAKES DO NOT RELEASE	Defective control valve piston. Defective hydraulic piston. Clogged master cylinder vent.	Broken booster piston return spring.
BRAKES GRAB	Intermittent bind in the control valve piston.	

FIG. 9—Diagnosis Guide — Air Hydraulic Brakes

INSUFFICIENT BRAKING ACTION	Low reservoir pressure. Brakes need lubrication, adjustment, or relining. Foot control valve delivery pressure too low due to a malfunction in the valve or incorrect adjustment of the treadle linkage.	
SLOW BRAKE ACTION	**SLOW APPLICATION** Lack of lubrication at brake shoe camshafts. Low reservoir pressure. Excessive leakage during brake application. Restricted or damaged pipes or hoses. Defective foot control valve and treadle linkage.	**SLOW RELEASE** Restricted port, weak return spring, or other defect in foot control valve. Brakes require lubrication or adjustment. Restricted or damaged pipes or hoses. Defective or restricted quick release valve or relay valve. Broken retraction springs or binding hold pins.
BRAKES INOPERATIVE	**BRAKES DO NOT RELEASE** Restricted brake lines. Weak return spring or other defect in foot control valve. Broken brake shoe retracting springs or rusted front anchor pins.	**BRAKES DO NOT APPLY** Low reservoir pressure. Restricted or broken pipes or hoses. Defective foot control valve.
UNEVEN OR GRABBING BRAKES	Grease on brake linings. Out-of-round brake drums. Bind in brake shoe mountings. Defective foot control valve. Wet brakes.	Brakes need adjustment, lubrication, or relining. Leaking brake chambers. Broken brake chamber piston return spring.
QUICK AIR PRESSURE DROP WITH ENGINE STOPPED	**BRAKES RELEASED** Excessive leakage at foot control valve, governor, compressor discharge valve, or at other points in the system.	**BRAKES APPLIED** Excessive leakage in brake chambers, brake chamber diaphragms, tube and hose connections, or foot control valve.

FIG. 10—Diagnosis Guide — Cam-Type Air Brakes

PART 2-2— *Hydraulic Brakes*

Section	Page
1 Description and Operation	2-14
Self Adjusting Brakes	2-18
2 In-Vehicle Adjustments and Repairs	2-18
Brake Shoe Adjustment	2-18
Hydraulic System Bleeding	2-20
Hydraulic Line Replacement	2-22
3 Removal and Installation	2-22
Brake Drums--F-, P-100 and F-250 with Self Adjusting Brakes	2-22
Front Brake Drum--4-Wheel Drive Trucks	2-23
Brake Drums 250 Through 1000 Series Except 4-Wheel Drive—Front	2-23
Brake Shoe and Adjusting Screw F- and P-100 Trucks Only	2-23
Web Ledge Single Anchor Brake Shoe—F-250 Truck	2-24
Standard Single Anchor Brake Shoe	2-25
Two-Cylinder Brake Shoe—Front	2-26
Two-Cylinder Brake Shoe—Rear	2-26
Brake Wheel Cylinder	2-26
Brake Backing Plate—F-100 and P-100 Series Trucks Except 4-Wheel Drive—Front	2-27
Brake Backing Plate F-250 4x2 With Spicer 44-3 Axle	2-28
Brake Backing Plate—Vehicles with 4-Wheel Drive Front	2-28
Brake Backing Plate 350 through 950 Series Truck Except 4-Wheel Drive—Front	2-28
Dual Brake Master Cylinder—Power Brakes—F-100, F-250 and F-350 Series Trucks	2-29
Dual Brake Master Cylinder—Standard Brakes—F-100, F-250 and F-350 Series Trucks	2-29
Single Brake System Master Cylinder B-, F-, N-, and T-Series Trucks	2-30
Single Brake Hydraulic System Master Cylinder—P-350 Thru 500 Series Trucks	2-30
Master Cylinder—C-Series Truck	2-31
Dual Brake Master Cylinder Pressure Differential Valve Assembly	2-31
Brake Pedal Assembly—F-100, F-250 and F-350	2-31
Brake Pedal—B-, F-, (Except F-100, F-250 and F-350) N-, or T-Series and P-100 Truck	2-32
Brake Pedal—P-Series Trucks Except P-100	2-33
Brake Pedal—C-Series Truck	2-33
4 Major Repair Operations	2-33
Brake Wheel Cylinder	2-33
Single Brake System Master Cylinder—Except vehicles Equipped With A Dash Mounted Booster	2-33
Dual Brake System Master Cylinder—Standard and Power Brakes—F-100, F-250 and F-350	2-34
Master Cylinder—Midland Ross Booster (Dash Mounted)—Diaphragm-Type—F-, B-, N-500 Thru 600 and B-700 Trucks	2-35

1 DESCRIPTION AND OPERATION

Conventional hydraulically operated service brakes (Fig. 1) are standard equipment on 500 through 800 Series and on some 850 and 950 Series Ford Trucks.

A dual-master cylinder brake system (Fig. 2) is used as standard equipment on F-100 through 350 and P-100 Series models.

A code letter is stamped on the end of each dual-master cylinder body casting for easy service identification. The truck models, type of brakes and the identification code letters are shown on the dual-master cylinder identification chart (Fig. 3).

The dual, master cylinder contains a double hydraulic cylinder with two fluid reservoirs, two hydraulic pistons (a primary and secondary) and two residual check valves, located in the outlet ports (Fig. 4). On all vehicles except the F-350 Series, the master cylinder secondary systems outlet port is connected to the rear brakes and the primary system brake outlet port is connected to the front brakes. On the F-350 Series truck models, the master cylinder secondary system outlet port is connected to the front brakes and the primary system outlet port is connected to the rear brakes.

The master cylinder primary and secondary pistons function together when the primary and secondary systems are fully operative.

With the master cylinder and front and rear brake systems filled and bled, a solid column of fluid is located on both the primary and secondary pistons. Upon application of the brakes at the brake pedal, fluid is displaced by the piston into the wheel cylinders to activate both the front and rear brakes. Upon release of brake application, the brake fluid returns from the wheel cylinders through the front and rear brake lines and residual check valves to the master cylinder bore.

Failure in either the front or rear brake system does not result in failure of the entire hydraulic brake system. For example:

Should hydraulic failure occur in the rear brake system, the hydraulic pressure from the primary piston (which actuates the front brakes on all except F-350 Series truck models) causes the unresisted secondary piston (which actuates the rear brakes on all except F-350 Series truck models) to bottom out in its bore. The primary piston then proceeds to actuate the front brakes with the continued stroke of the brake pedal. Fluid under pressure will continue to be displaced by the front brake (primary) system allowing braking at the front wheels.

Should a failure occur in the primary (front brake) hydraulic system, the initial brake pedal stroke would cause the unresisted primary piston to bottom out on the secondary piston. Continued pedal stroke will move both pistons and the fluid under pressure applied by the secondary piston will apply the rear brakes.

As noted in the aforementioned description and the example above, the brake systems for the F-350 Series trucks are the reverse of the systems in the example. However, the operating principle for the F-350 Series trucks is the same.

Failure in one independent hydraulic system does not affect the hydraulic fluid displacement of the other independent system. In addition, hydraulic output pressure remains basi-

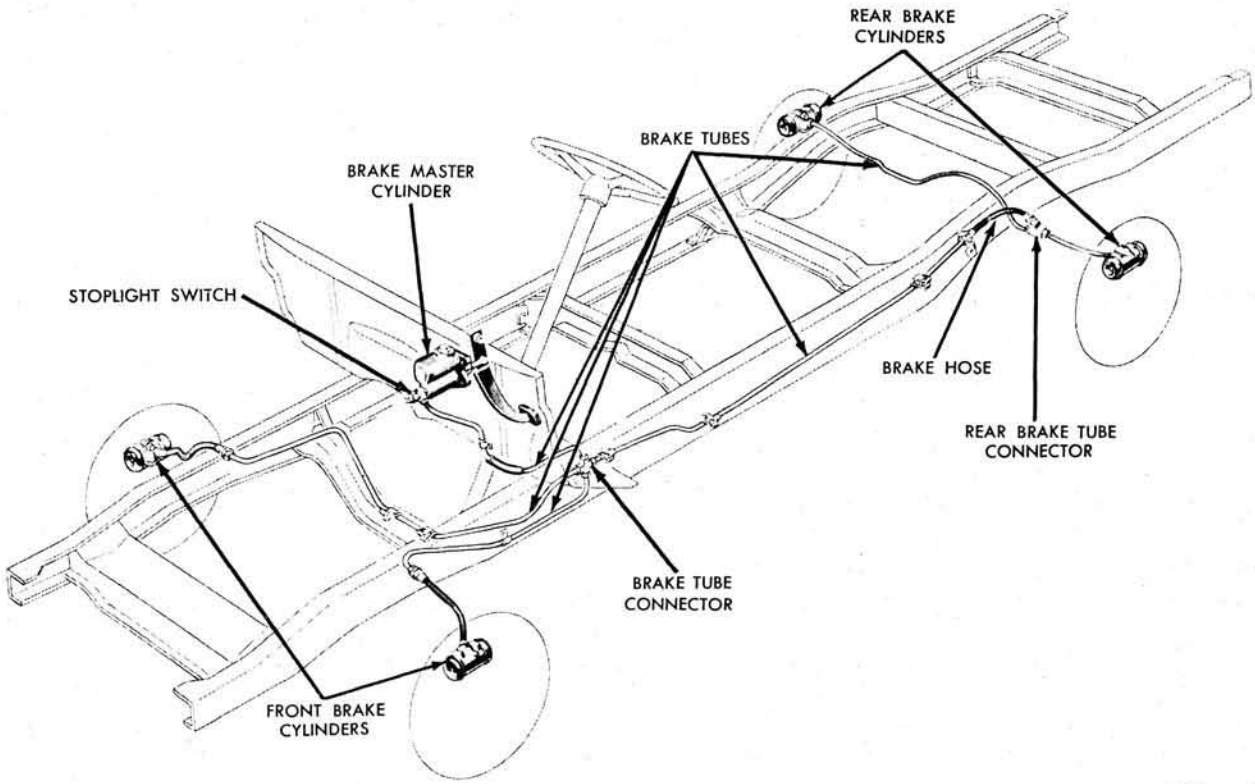

FIG. 1—Typical Hydraulic Brake System—Conventional Master Cylinder

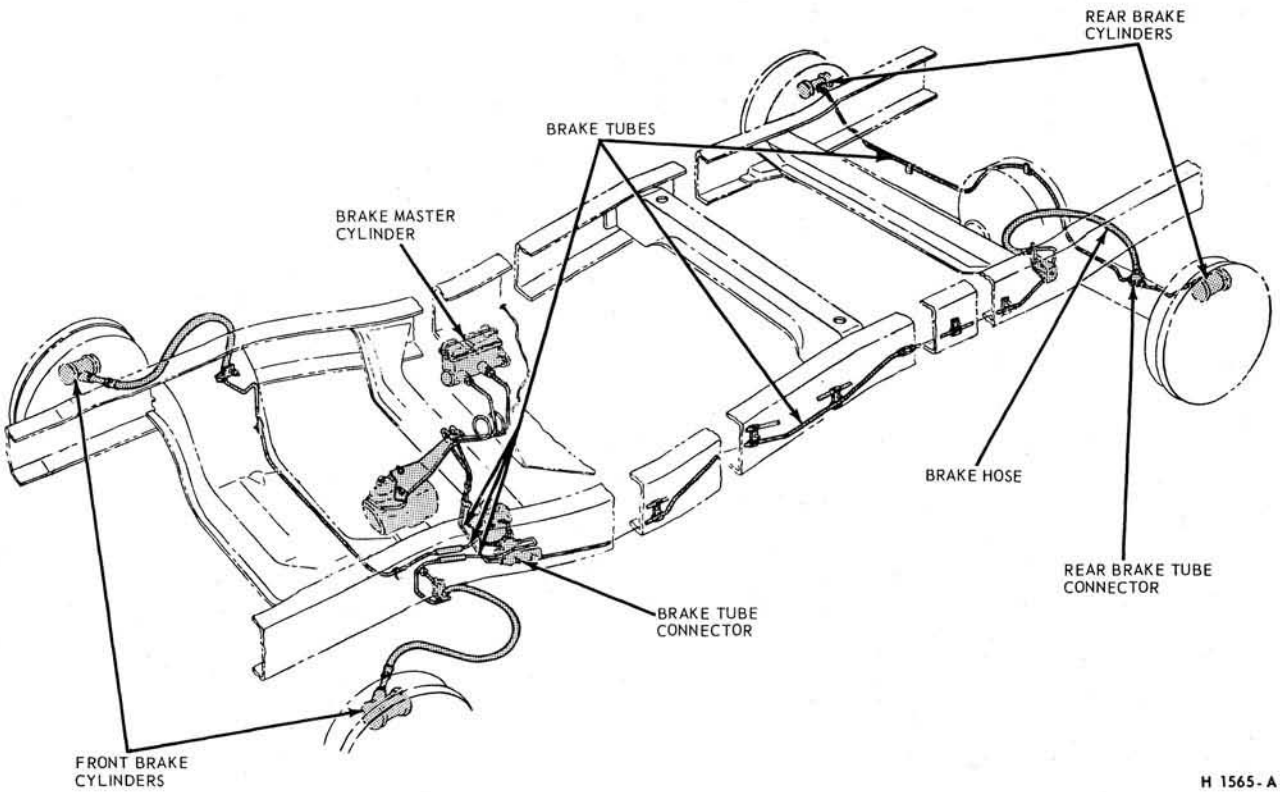

FIG. 2—Typical Hydraulic Brake System—Dual Brake Master Cylinder

cally the same for the same pedal effort.

The increased pedal travel and pedal effort required to compensate for the loss of the failed portion of the brake system provides adequate warning that partial brake failure has occured. **With the ignition switch turned on, a dual brake warning light on the instrument panel will also indicate a brake system failure.**

Brake lines (tubes) are connected from the brake master cylinder primary and secondary system outlet ports to the pressure differential valve assembly (Fig. 5). The electrical brake warning switch, and the brake lines (tubes) leading from the differential valve assembly to the front and rear wheel brake cylinders are also shown in Fig. 5.

The brake system hydraulic pressure differential valve assembly and the mechanically operated electrical switch operates the dual brake system warning light. The spring-loaded switch plunger contacts the bottom of a tapered shoulder groove in the center of the differential valve. O-ring seals are used in the seal ring lands near each end of the valve (Fig. 5).

As noted previously, the brake systems for the F-350 Series trucks are the reverse of the F-100, F-250 and P-100 Series trucks. However, the operating principles of the differential valve are the same as noted in the following example:

Should a failure of the rear brake system occur, hydraulic fluid pressure in the rear brake (secondary system on all except F-350 Series trucks) system would drop. During brake pedal operation, the fluid pressure build up of the front brake system (primary system—on all except F-350 Series trucks) would force the differential valve toward the low pressure area (secondary system outlet port). Movement of the differential valve forces the switch plunger upward over the tapered shoulder to close the switch electrical contacts and lights the dual brake system warning lamp, signaling a brake system failure.

Conversely, failure of the primary system (front brakes) would force the differential valve toward the low pressure area (primary brake system outlet port) and activate the brake warning switch mechanism in the same manner as described above.

The standard hydraulic brake system on some trucks is assisted by a vacuum booster which may be installed as either standard or optional equipment. Other trucks use an optional compressed air booster (air-hydraulic unit) to provide a power assist to the hydraulic brakes.

The master cylinder converts physical force from the brake pedal and booster into hydraulic pressure against the pistons in the wheel cylinders. The wheel cylinder pistons in turn convert hydraulic pressure back into physical force at the brake shoes.

All Ford truck models have internal expanding shoes. The different types of brake assembly vary in the way that the shoes are anchored, in the number of wheel cylinders used at each

Truck Model	Master Cylinder Identification Code	Color Code
P-100	V	Yellow
F-100 (4x4)	J	Red
F-100-250 (4x2)	R	None
F-250 (4x4)	R	None
F-350	H	Green

FIG. 3—Dual Master Cylinder Identification Chart

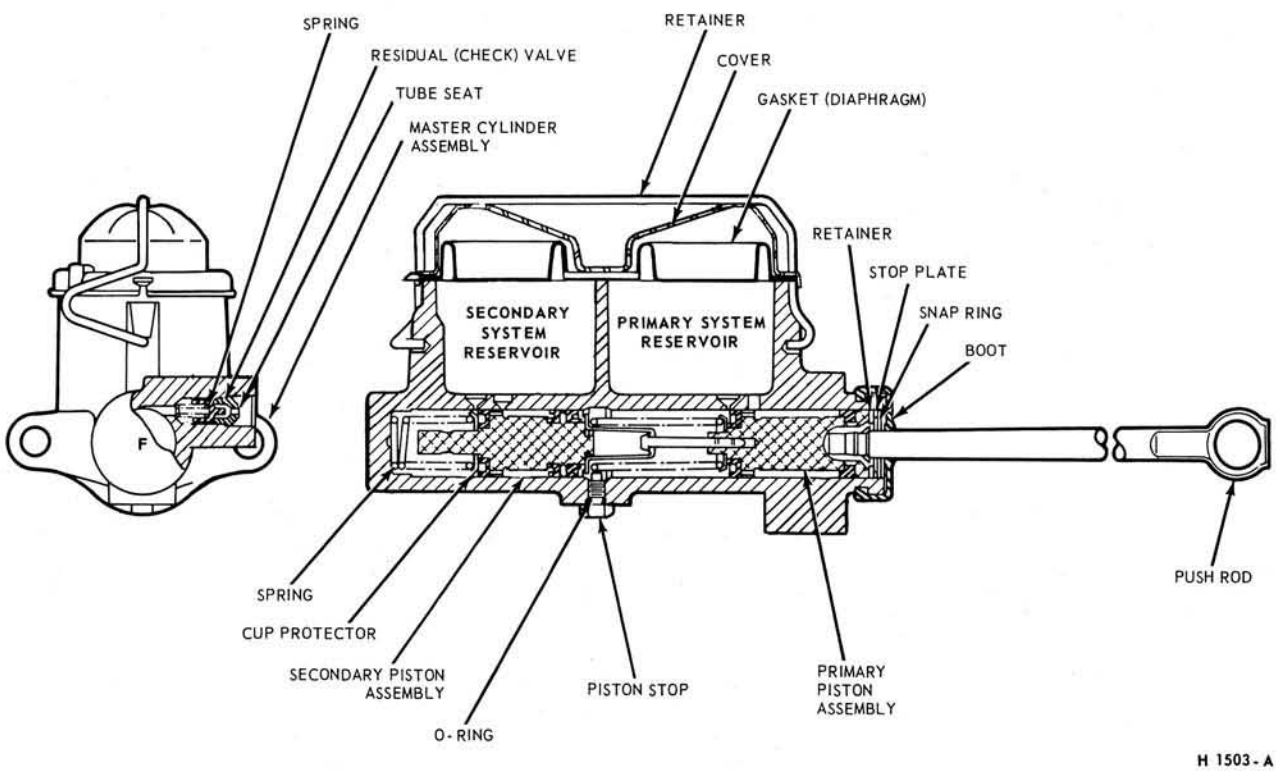

FIG. 4—Dual Master Cylinder—P and F-Series—Typical

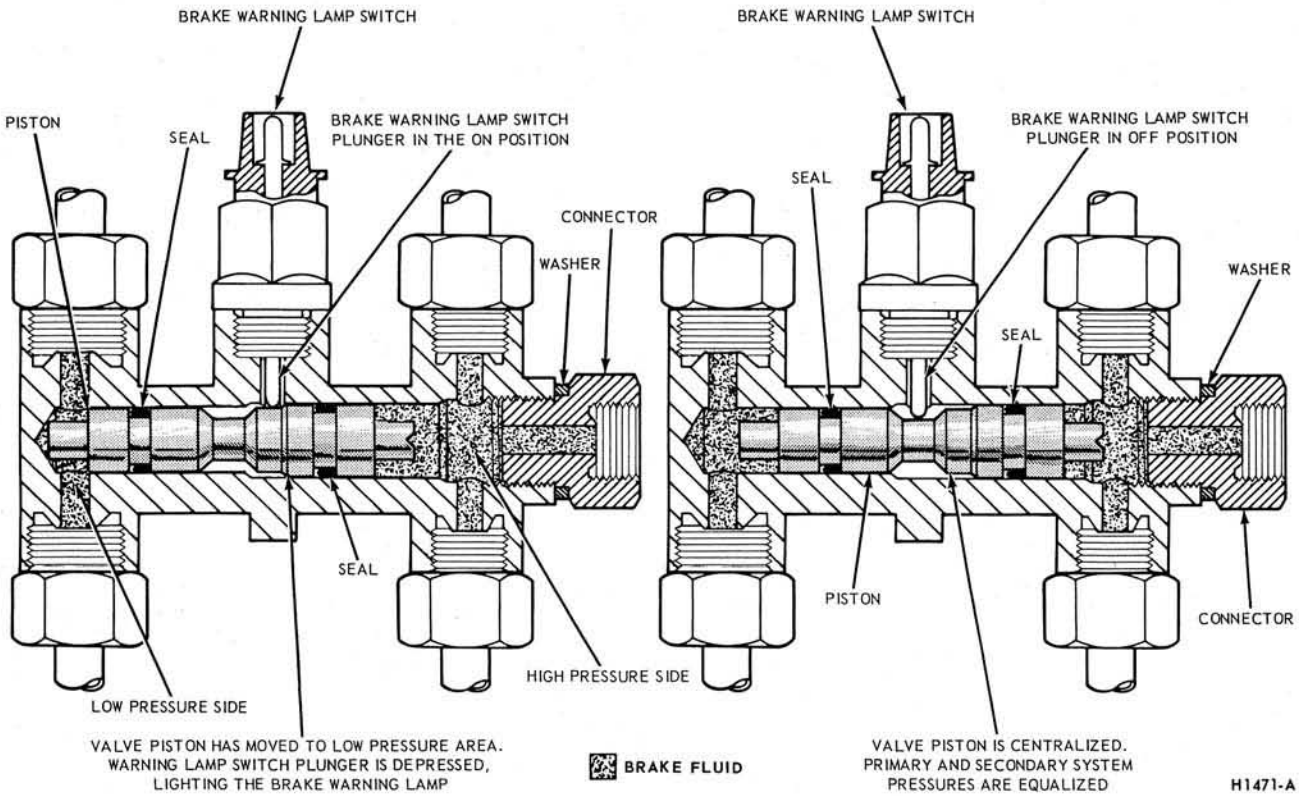

FIG. 5—Differential Valve System—Typical

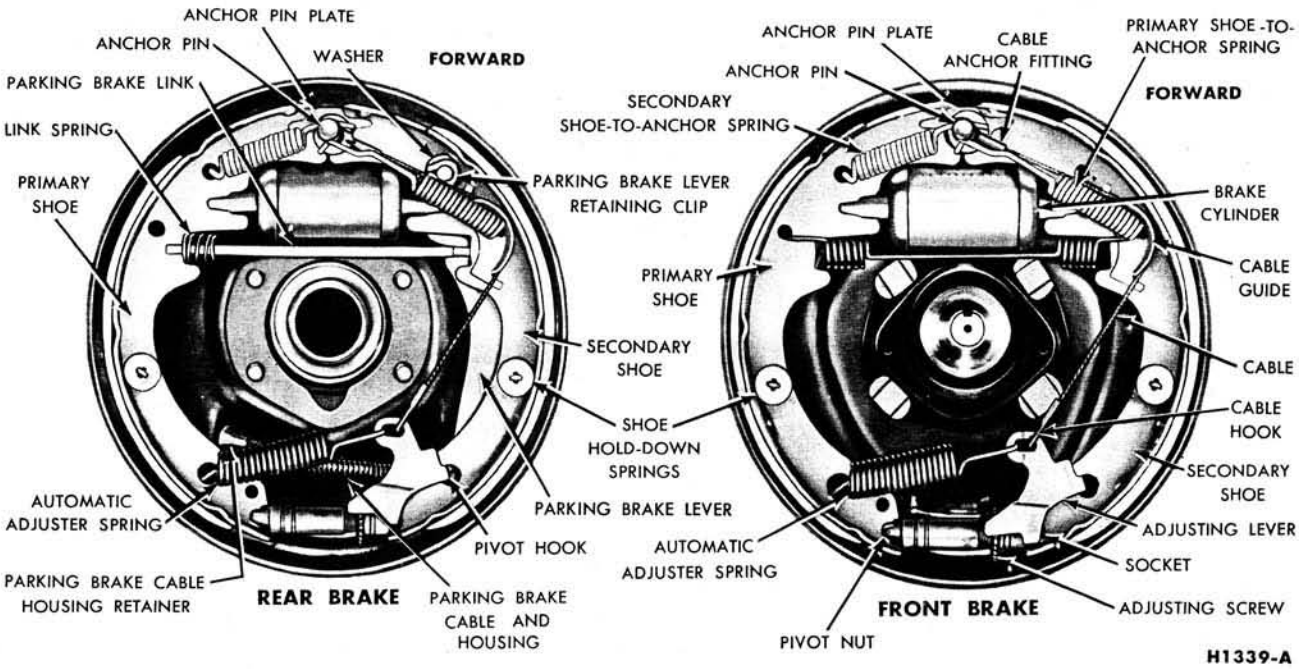

FIG. 6—Self Adjusting Brake Assemblies — F-100 Series

wheel, and in the number of pistons in the wheel cylinder.

In the single anchor type, both brake shoes are mounted to the same anchor and are actuated by one wheel cylinder. In the uni-servo, single anchor brake, the wheel cylinder has only one piston which exerts force against the upper end of the primary shoe (Fig. 20). In the duo-servo, single anchor brake, the wheel cylinder has two pistons. One piston exerts force against the upper end of the primary shoe; the other piston exerts force against the upper end of the secondary shoe (Figs. 6 and 7).

In the double anchor type, each shoe is mounted to a separate anchor. The shoes are actuated by one duo-servo (two piston) cylinder at the upper end.

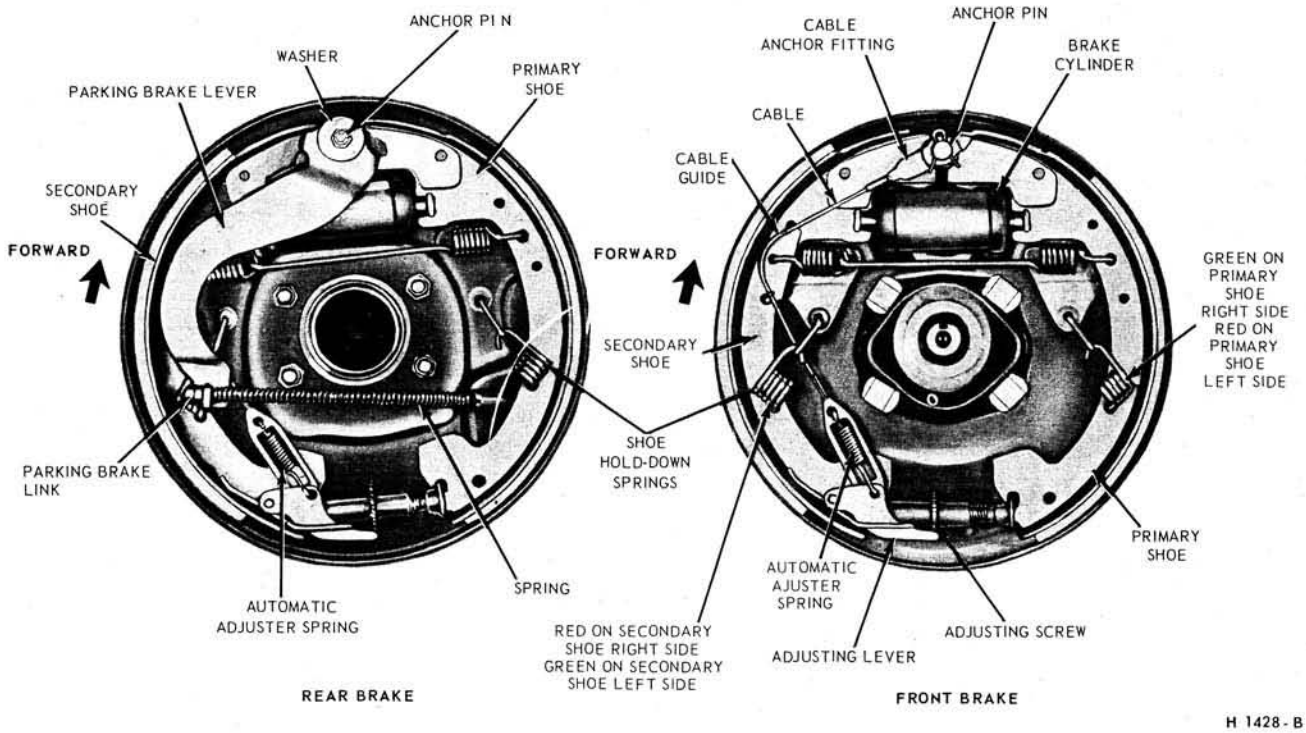

FIG. 7—Self Adjusting Brake Assemblies — F-250 Series

The front wheels of some trucks are equipped with two cylinders, each having one piston (Fig. 21). The piston in one cylinder exerts force against one end of one shoe; the piston in the other cylinder exerts force against the opposite end of the other shoe.

The rear wheels of some vehicles are equipped with two cylinders, each having two pistons (four pistons total). Each of the four pistons exerts force against one end of one shoe (Figs. 22 and 23).

SELF ADJUSTING BRAKES

Single anchor duo servo type brake assemblies equipped with a self adjusting mechanism are used front and rear on F-100, P-100 and F-250 trucks. The F-250 self-adjusting brake differs from the brake used on the F- and P-100 and is not interchangeable.

F-100 AND P-100 TYPE

The self-adjusting brake mechanism consists of a cable, cable guide, adjusting lever, and adjuster spring (Fig. 6). The cable is hooked over the anchor pin at the top and is connected to the lever at the bottom. The cable is connected to the secondary brake shoe by means of the cable guide. The adjuster spring is hooked to the primary brake shoe and to the lever.

The automatic adjuster operates only while the truck is moving rearward and the brake pedal pressure is firmly applied.

With the truck moving rearward and the brakes applied the wrap-around action of the shoes following the drum forces the upper end of the primary shoe against the anchor pin. The action of the wheel cylinder moves the upper end of the secondary shoe away from the anchor pin. The movement of the secondary shoe causes the cable to pull the adjusting lever upward and against the end of a tooth on the adjusting screw star-wheel. The upward travel of the lever increases as lining wear increases. When the lever can move upward far enough it passes over the end of the tooth and engages the tooth. When the brakes are released, the adjuste lever downward cau to turn and expand t wheel is turned one tooth at a time as the linings progressively wear.

With the truck moving forward and the brakes applied, the secondary shoe is against the anchor pin and the primary shoe is moved toward the drum. Therefore, the adjuster does not operate.

The rear brake assembly is basically the same as the front brake. The conventional parking brake lever, link, and spring are used in the rear brake.

The anchor pins on F- and P-100 brakes are fixed and non-adjustable.

F-250 TYPE

The self-adjusting brake used on the F-250 is basically similar in operation to that used on the F- and P-100. However, the adjuster lever moves upward to turn the star- or ratchet-wheel, rather than downward as on the F-, P-100.

The parking brake operation differs from the F-, P-100 type brake. As can be seen in Fig. 7, a positive camming

2 IN-VEHICLE ADJUSTMENTS AND R

BRAKE SHOE ADJUSTMENT

The brake drums should be at normal room temperature, when the brake shoes are adjusted. adjusted when the expanded, the shoe drums cool and cont

Buy Now
VISA DISCOVER AMEX PayPal